GENERAL TOLERANCE										USED ON
10 MAX	30 MAX	50 MAX	70 MAX	100 MAX	120 MAX	250 MAX	250 OVER	ANGLE	ECCENT	
±0.15	±0.20	±0.30	±0.40	±0.50	±0.75	±0.90	±1.4	±0.5˚	0.1	

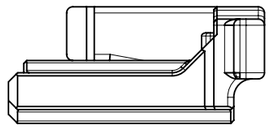

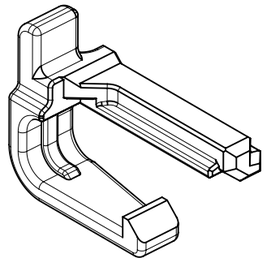

ISO VIEW

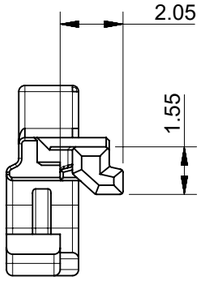

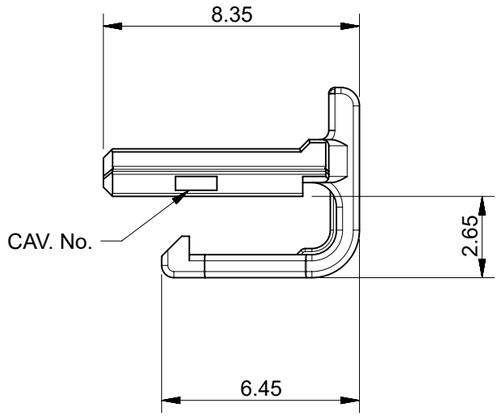

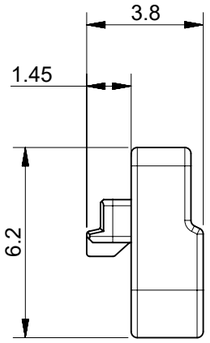

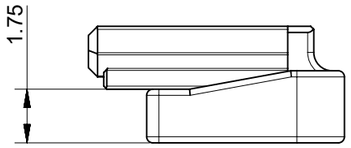

NOTES:
1. MATERIALS : POLYESTER (PBT)-GF17, UL94 V-0
2. APPLICABLE HOUSING : 560123 SERIES
3. GENERAL TOLERANCE : SEE TABLE
4. EVL AND RoHS COMPLIANT
5. PRODUCT SPECIFICATION : PS-560123-001,002,003
6. PACKING SPECIFICATION : PK-560125-001

ORDER NO.	MATERIAL NO.	COLOR
560125-0300	5601250300	GRAY
560125-0301	5601250301	BLACK

THIS DRAWING CONTAINS INFORMATION THAT IS PROPRIETARY TO MOLEX ELECTRONIC TECHNOLOGIES, LLC AND SHOULD NOT BE USED WITHOUT WRITTEN PERMISSION

SYMBOLS: E/A = 0; E/C = 0; E/F = 0; S = 0; ▼ = 0; C = 0; ☒ = 0; ■ = 0; ▽ = 0

DIMENSION UNITS	SCALE
mm	5:1

GENERAL TOLERANCES (UNLESS SPECIFIED)

ANGULAR TOL	± °
4 PLACES	±
3 PLACES	±
2 PLACES	±
1 PLACE	±
0 PLACES	±

DRAFT WHERE APPLICABLE MUST REMAIN WITHIN DIMENSIONS

CURRENT REV DESC:

EC NO: 629104
DRWN: SAKIM 2019/12/12
CHK'D: YKJUNG 2019/12/13
APPR: YKJUNG 2019/12/13

INITIAL REVISION:
DRWN: YIBAEK 2014/07/08
APPR: SRTAK 2014/08/26

THIRD ANGLE PROJECTION | DRAWING: A3-SIZE | SERIES: 560125

molex

NEW 2.0 PITCH W/B CONN.
REC. 3WAY ISL DURACLIK ISL SERIES

PRODUCT CUSTOMER DRAWING

DOCUMENT NUMBER	DOC TYPE	DOC PART	REVISION
SD-560125-003	PSD	001	B1

MATERIAL NUMBER	CUSTOMER	SHEET NUMBER
	GENERAL MARKET	1 OF 1

DOCUMENT STATUS	P1	RELEASE DATE	2019/12/13 04:33:55

FORMAT: master_Sized-A3
REVISION: H
DATE: 2018/01/18