THIS COPY IS PROVIDED ON A RESTRICTED BASIS AND IS NOT TO BE USED IN ANY WAY DETRIMENTAL TO THE INTERESTS OF PANDUIT CORP.

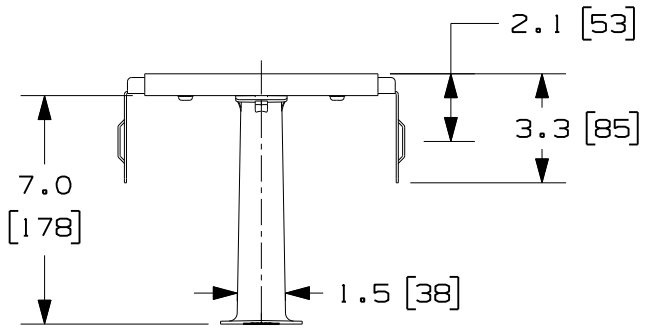

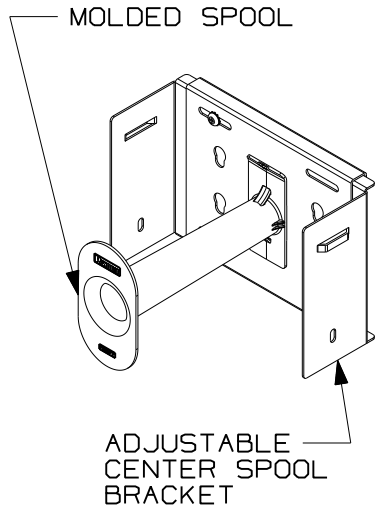

PANDUIT P/N	WEIGHT
CNSPCA	2.10 LBS/EACH 0.95 Kg/EACH

NOTES:
1. VISIT OUR ON-LINE CATALOG AT WWW.PANDUIT.COM FOR A LIST OF CURRENT PARTS APPLICABLE FOR USE WITH THIS PRODUCT.
2. DIMENSIONS IN PARENTHESES ARE METRIC (mm).
3. PARTS SUPPLIED:
   (1)- MOLDED SPOOL (PN: PRSP7)
   (1)- CENTER SPOOL BRACKET
   (1)- HARDWARE KIT:
      (2)- #12-24 TRILOBULAR SCREWS
      (2)- #12 LOCKWASHERS
4. SPOOL BRACKET IS ADJUSTABLE FROM 7.5" TO 9.5" HORIZONTALLY.

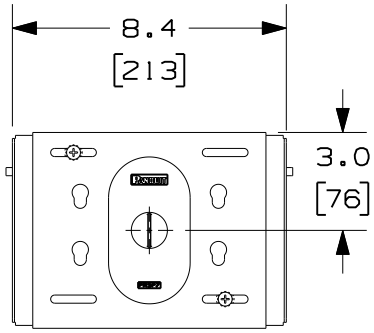

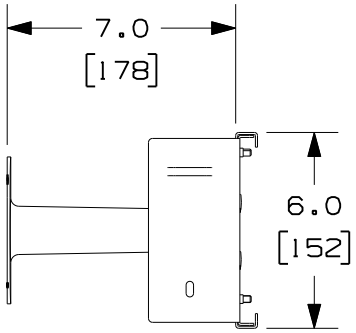

MODEL FILENAME: V10395ZE/02.PRT

CAD FILENAME/LAYERS: V10395ZE_DC/02A.PRT

PANDUIT CORP. TINLEY PARK, ILLINOIS

(CNSPCA) ADJUSTABLE CENTER SLACK SPOOL
CUSTOMER DRAWING

UNLESS OTHERWISE SPECIFIED, DIMENSIONAL TOLERANCES ARE:

INCHES		[METRIC - MILLIMETER]		ANGLE
X.X	+/- 0.06	X.	+/- 1.5	+/- 1°
X.XX	+/- 0.03	X.X	+/- 0.8	
X.XXX	+/- 0.015	X.XX	+/- 0.4	

UNLESS OTHERWISE SPECIFIED, ALL DIMENSIONS ARE GIVEN IN INCHES, THIRD ANGLE PROJECTION.

DRAWN BY: JDWE

MAT'L: SEE NOTES

SCALE: NONE

DATE: 11-12-08

CHK'D:

DRAWING NO.: V10395ZE-DC

DWG SIZE: A

REV	DATE	BY	CHK	DESCRIPTION	ECN - R	CUST	SUP	OTH
02A	11-12-08	JDWE		RELEASED TO PRODUCTION	V10395ZE-DC			