THIS COPY IS PROVIDED ON A RESTRICTED BASIS AND IS NOT TO BE USED IN ANY WAY DETRIMENTAL TO THE INTERESTS OF PANDUIT CORP.

PANDUIT PART NO. *	WEIGHT
DPLT	.003 LB/EACH (1 g/EACH)

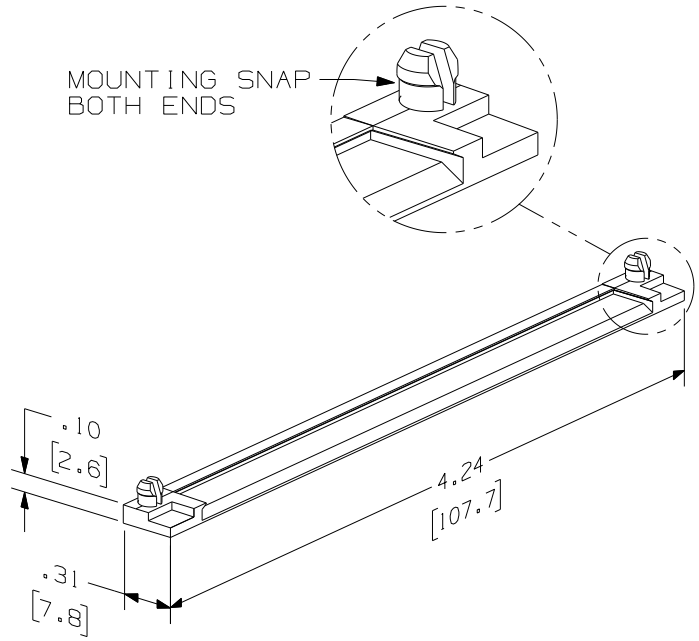

NOTES:

* 1. SEE CURRENT CATALOG FOR ADDITIONAL PART NUMBER SUFFIXES TO INDICATE COLOR AND OR PACKAGE QUANTITY.

2. INCLUDES ONE LABEL COVER AND ONE LABEL FOR IDENTIFYING PATCH PANEL.

3. DIMENSIONS IN PARENTHESES ARE IN METRIC.

REV	DATE	BY	CHK	DESCRIPTION	ECN - R	CUST	SUP
R	6/30/93	DW		RELEASED TO PRODUCTION	34531-03		

CAD FILENAME/LAYERS: D34531_DPLT_C (D)

PANDUIT CORP. TINLEY PARK, ILLINOIS

DATA-PATCH TOP LABEL KIT
(DPLT)
CUSTOMER DRAWING

UNLESS OTHERWISE SPECIFIED, DIMENSIONAL TOLERANCES ARE:
(.X) ± (.XXX) ±
(.XX) ±.03(.8) ANGLES ±

UNLESS OTHERWISE SPECIFIED, ALL DIMENSIONS ARE GIVEN IN INCHES, THIRD ANGLE PROJECTION.

DRAWN BY: DW
DATE: 6/30/93
CHK'D:
MAT'L: POLYCARBONATE
SCALE: NONE
DRAWING NO.: 34531-03
DWG SIZE: A