THIS COPY IS PROVIDED ON A RESTRICTED BASIS AND IS NOT TO BE USED IN ANY WAY DETRIMENTAL TO THE INTERESTS OF PANDUIT CORP.

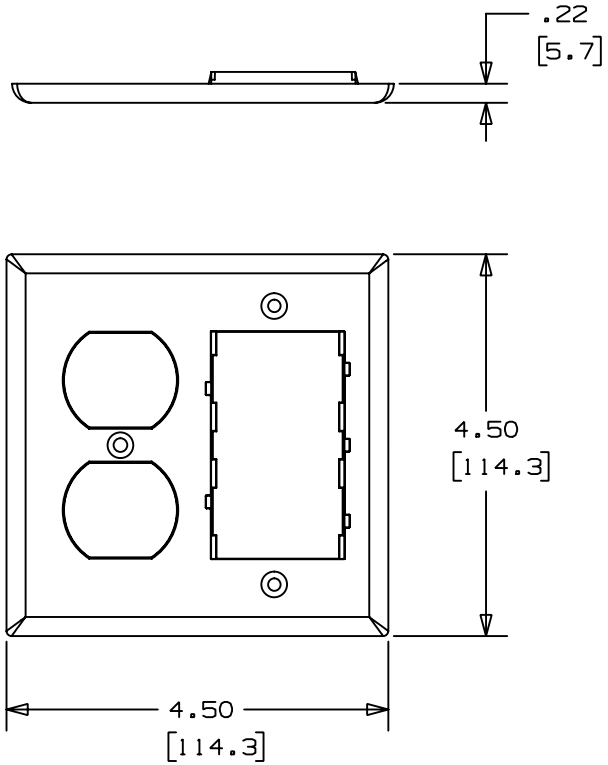

PANDUIT P/N	WEIGHT
FP2DC	.7 LB/10 PCS (316 g/10 PCS)

NOTES:

1. SEE CURRENT CATALOG FOR ADDITIONAL PART SUFFIXES TO INDICATE COLOR AND OR PACKAGE QUANTITY.
2. COVERS STANDARD DUPLEX ELECTRICAL DEVICES AND PROVIDES PROPER SIZED OPENING TO ACCEPT TWO MINI-COM SLOPED OR FLAT INSERTS.
3. THIS PART IS SUPPLIED WITH ONE #6-32 X 3/8" SLOTTED COUNTERSUNK OVAL HEAD SCREW AND TWO #6-20 X 3/4" SLOTTED COUNTERSUNK OVAL HEAD SCREWS. SCREW HEADS HAVE PAINTED FINISH TO MATCH.
4. DIMENSIONS IN PARENTHESES ARE IN METRIC.

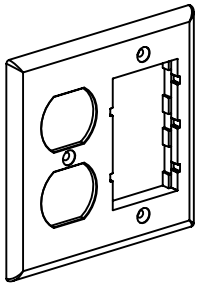

REV	DATE	BY	CHK	DESCRIPTION	ECN	CHK	CUST	SUP
1	10-14-98	DW	HIW	A. MATERIAL WAS PVC.	36282-06	HIW	HIW	
R	11-06-97	DW	HIW	RELEASED TO PRODUCTION.	36282-06	HIW		

CAD FILENAME/LAYERS: D36282BF_DC_FP2DC_01

PANDUIT CORP. TINLEY PARK, ILLINOIS

2 GANG COMMUNICATIONS AND DUPLEX ELECTRICAL DEVICE FACEPLATE (FP2DC)
CUSTOMER DRAWING

UNLESS OTHERWISE SPECIFIED, DIMENSIONAL TOLERANCES ARE:
(.X) ± (.XXX) ±
(.XX) ±.03(.8) ANGLES ±

UNLESS OTHERWISE SPECIFIED, ALL DIMENSIONS ARE GIVEN IN INCHES, THIRD ANGLE PROJECTION.

DRAWN BY: DW
DATE: 11-06-97
CHECKED BY: HIW
MAT'L: (A) ABS
SCALE: NONE
DRAWING NO.: 36282-06
DWG SIZE: A