THIS COPY IS PROVIDED ON A RESTRICTED BASIS AND IS NOT TO BE USED IN ANY WAY DETRIMENTAL TO THE INTERESTS OF PANDUIT CORP.

PANDUIT PART NUMBER	STUD SIZE	DIMENSIONS in.				
		A ±.020	W ±.010	C ±.015	M ±.020	H ±.010
PNF18-6F	#6	.80 (20.32)	.30 (7.63)	.22 (5.59)	.66 (16.76)	.15 (3.81)
PNF18-8F	#8	.86 (21.84)	.31 (7.87)	.25 (6.35)	.69 (17.53)	.17 (4.32)
PNF18-10F	#10	.87 (22.10)	.34 (8.64)	.26 (6.60)	.71 (18.03)	.20 (5.08)
PNF18-14F	1/4"	1.05 (26.67)	.44 (11.18)	.35 (8.89)	.80 (20.32)	.27 (6.86)

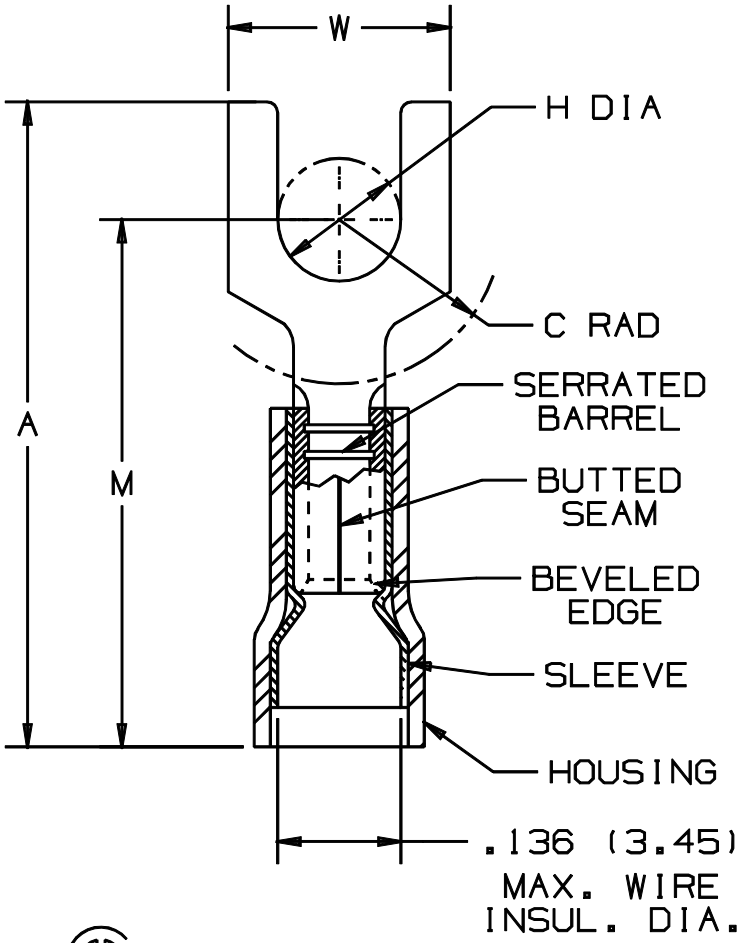

NOTES:

1. UL LISTED AND CSA CERTIFIED FOR:
   A. 600V. MAX. VOLTAGE RATING
   B. #22-18 AWG SOLID OR STRANDED COPPER WIRE
   C. 221° F (105° C) MAX. TEMP. RATING
2. MATERIAL:
   A. STAMPING - .03" (.762) THK COPPER, TIN PLATED
   B. HOUSING - NYLON, RED
   C. SLEEVE - BRASS, TIN PLATED
3. PACKAGE QTY: STD. PKG. 100
   BULK PKG. 1000
4. DIMENSIONS IN BRACKETS ARE IN MILLIMETERS
5. INSTALLATION TOOLS:
   A. UL LISTED AND CSA CERTIFIED: CT-100, CT-250, CT-400, CT-500, CT-550
   B. PANDUIT APPROVED: CT-160, CT-260

UL LISTED 587H E52164

CSA CERTIFIED LR31212

A41260_05

REV	DATE	BY	CHK	DESCRIPTION	ECN#	OA	CUST	PM	APP
05	1/01	RM		FILESPEC WAS N41260AA_PCD_02					
04	8-94	SM		FOR PNF18-6F W=.28 (7.11)	05373				
03	7-88	DW	LA	REDRAWN WITH REVISIONS	03052		LA	JB	

PANDUIT CORP. TINLEY PARK, ILLINOIS

#22-18 BARREL FORK, NYLON INSULATED FUNNELED WIRE ENTRY, .136 (3.45) MAX WIRE INSUL. DIAMETER

DRAWN BY	CHK'D	SCALE	DRAWING NO.
DAW	LA	NONE	A41260