THIS COPY IS PROVIDED ON A RESTRICTED BASIS AND IS NOT TO BE USED IN ANY WAY DETRIMENTAL TO THE INTERESTS OF PANDUIT CORP.

PANDUIT PART NUMBER	STUD SIZE	DIMENSIONS in.				
		A ±.03	W ±.01	C ±.02	M ±.03	H ±.01
PV10-6LF	#6	1.03 (26.16)	.30 (7.62)	.23 (5.84)	.80 (20.32	.14 (3.56)
PV10-8LF	#8	1.05 (26.67)	.30 (7.62)	.23 (5.84)	.80 (20.32	.16 (4.06)
PV10-10LF	#10	1.04 (26.42)	.34 (8.64)	.23 (5.84)	.80 (20.32	.19 (4.83)
PV10-14LF	1/4"	1.19 (30.23)	.46 (11.68)	.36 (9.14)	.90 (22.86)	.25 (6.35)

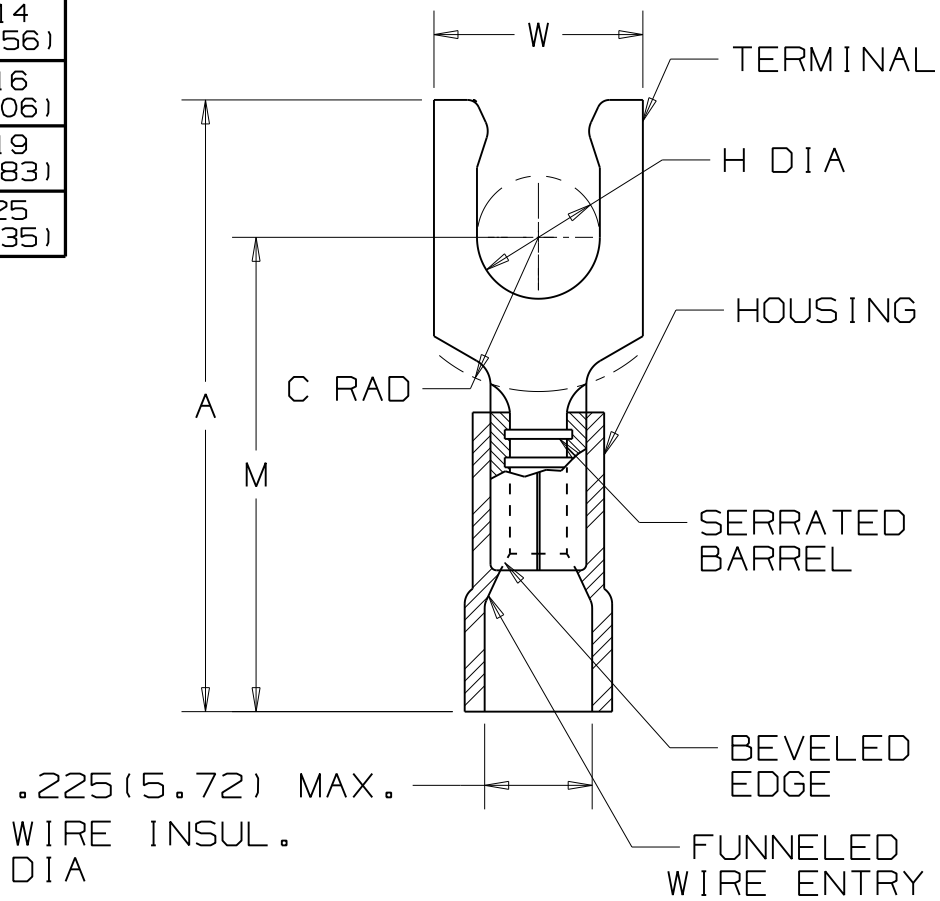

NOTES:

1. UL LISTED AND CSA CERTIFIED FOR:
   A. 600V. MAX. VOLTAGE RATING (1000V. MAX. IN SIGNS,FIXTURES & LUMINARIES)
   B. 221°F (105°C) MAX. TEMP. RATING
   C. #12-10 STRANDED COPPER WIRE ONLY
2. SEE www.panduit.com FOR PART NUMBER SUFFIX DESIGNATION FOR PACKAGE SIZE.
3. MATERIAL:
   A. STAMPING - .04 (1.02) THK. COPPER TIN PLATED
   B. HOUSING - VINYL, YELLOW
4. DIMENSIONS IN BRACKETS ARE IN mm.
5. INSTALLATION TOOLS:
   A. UL LISTED AND CSA CERTIFIED: CT-100A, CT-600-A, CT-1550, CT-1551, CT-2500
   B. PANDUIT APPROVED: CT-550
6. WIRE STRIP LENGTH: 5/16 $^{+1/32}_{-0}$

UL LISTED 587H E52164

CSA CERTIFIED LR31212

REV	DATE	BY	DESCRIPTION	CUST	PM
10	8/11	SHOR	ADDED INSTALLATION TOOLS, MODIFIED NOTE #2		

PANDUIT CORP. TINLEY PARK, ILLINOIS

#12-10 BARREL, FUNNELED VINYL INSULATED LOCKING FORK, .225 (5.72) MAX. WIRE INSUL. DIAMETER

DRAWN BY	CHK'D	SCALE	DRAWING NO.
DAW	LA	NONE	A41226