THIS DRAWING IS UNPUBLISHED. RELEASED FOR PUBLICATION APRIL ,2004.
© COPYRIGHT 2004 BY TYCO ELECTRONICS CORPORATION. ALL RIGHTS RESERVED.

| LOC | DIST |
|---|---|
| E | B |

REVISIONS

| P | LTR | DESCRIPTION | DATE | DWN | APVD |
|---|---|---|---|---|---|
| | A | EBD0-0035-03 | 10FEB04 | RS | FWK |

NOTES:

1. SINGLE PACK IN ACCORDANCE WITH SPEC 107-3275
2. 100 TRAY PACK IN ACCORDANCE WITH SPEC 107-3275
3. 0.08µm Au PLATING OVER 1.27µm Ni PLATING
4. 0.08µm Au PLATING OVER 1.27µm Ni PLATING OVER 0.76µm Cu PLATING
5. 0.76µm Au PLATING OVER 1.27µm Ni PLATING OVER 0.76µm Cu PLATING
6. PASSIVATED
7. WHITE BRONZE PLATING
8. PLATING AS PER BODY, EXCEPT FOR PASSIVATED WHICH IS NICKEL PLATED
9. HAND TOOL 9-1478240-0
10. DIE SET 9-1478242-0
11. FOR TECHNICAL DATA REFER TO YOUR LOCAL TYCO ELECTRONICS SALES OFFICE
12. ALL DIMENSIONS ARE NOMINAL FOR REFERENCE ONLY UNLESS OTHERWISE STATED

RECOMMENDED CRIMP SLEEVE A/F HEX

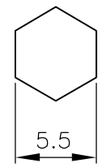


RECOMMENDED CABLE STRIPPING DIM'S

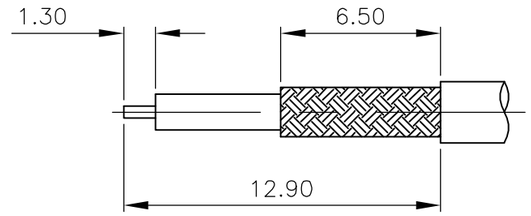


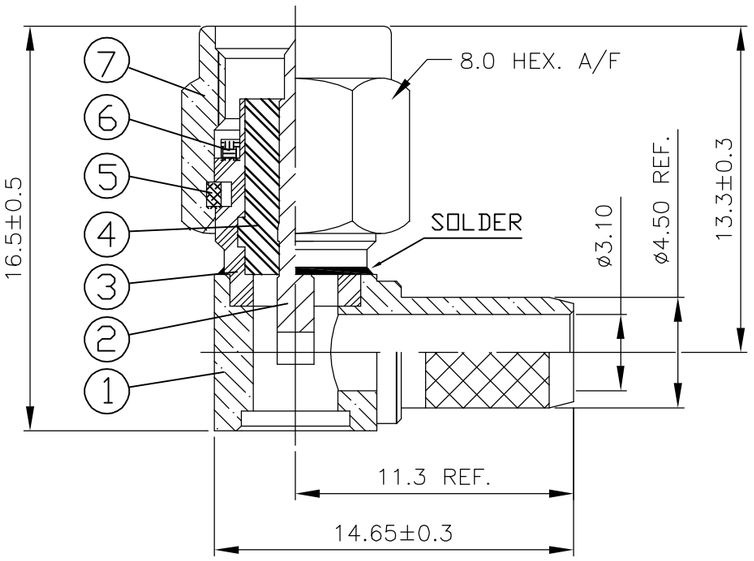


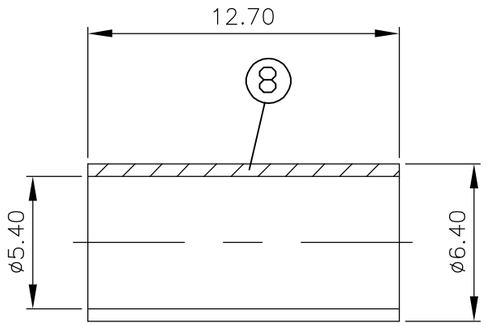


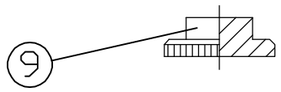


| 4--1 | 4--0 | 3--1 | 3--0 | 2--1 | 2--0 | 1--1 | 1--0 | MATERIAL | DESCRIPTION | ITEM |
|---|---|---|---|---|---|---|---|---|---|---|
| 1 | 1 | – | – | – | – | – | – | BRASS (7) | CAP | 9 |
| – | – | 1 | 1 | – | – | – | – | BRASS (4) | CAP | 9 |
| – | – | – | – | 1 | 1 | – | – | STAINLESS STEEL (6) | CAP | 9 |
| – | – | – | – | – | – | 1 | 1 | STAINLESS STEEL (3) | CAP | 9 |
| 1 | 1 | 1 | 1 | 1 | 1 | 1 | 1 | BRASS (8) | CRIMP SLEEVE | 8 |
| 1 | 1 | – | – | – | – | – | – | BRASS (7) | SHELL | 7 |
| – | – | 1 | 1 | – | – | – | – | BRASS (4) | SHELL | 7 |
| – | – | – | – | 1 | 1 | – | – | STAINLESS STEEL (6) | SHELL | 7 |
| – | – | – | – | – | – | 1 | 1 | STAINLESS STEEL (3) | SHELL | 7 |
| 1 | 1 | 1 | 1 | 1 | 1 | 1 | 1 | SILICON | GASKET | 6 |
| 1 | 1 | 1 | 1 | 1 | 1 | 1 | 1 | STAINLESS STEEL | CIRCLIP | 5 |
| 1 | 1 | 1 | 1 | 1 | 1 | 1 | 1 | PTFE | INSULATOR | 4 |
| 1 | 1 | – | – | – | – | – | – | BRASS (7) | BODY | 3 |
| – | – | 1 | 1 | – | – | – | – | BRASS (4) | BODY | 3 |
| – | – | – | – | 1 | 1 | – | – | STAINLESS STEEL (6) | BODY | 3 |
| – | – | – | – | – | – | 1 | 1 | STAINLESS STEEL (3) | BODY | 3 |
| 1 | 1 | 1 | 1 | 1 | 1 | 1 | 1 | BRASS (5) | CENTER CONTACT | 2 |
| 1 | 1 | – | – | – | – | – | – | BRASS (7) | BODY | 1 |
| – | – | 1 | 1 | – | – | – | – | BRASS (4) | BODY | 1 |
| – | – | – | – | 1 | 1 | – | – | STAINLESS STEEL (6) | BODY | 1 |
| – | – | – | – | – | – | 1 | 1 | STAINLESS STEEL (3) | BODY | 1 |
| (2) | (1) | (2) | (1) | (2) | (1) | (2) | (1) | | | |

QUANTITY PER ASSY — PARTS LIST

THIS DRAWING IS A CONTROLLED DOCUMENT.

DIMENSIONS: mm

TOLERANCES UNLESS OTHERWISE SPECIFIED:
0 PLC ± –
1 PLC ± –
2 PLC ± –
3 PLC ± –
4 PLC ± –
ANGLES ± –

MATERIAL: SEE TABLE

FINISH: –

| | | |
|---|---|---|
| DWN | R.SMITH | 10FEB04 |
| CHK | S.PARLOW | 10FEB04 |
| APVD | F.WHEELER-KING | 10FEB04 |
| PRODUCT SPEC | 108-3460 | |
| APPLICATION SPEC | 411-3276 | |
| WEIGHT | – | |

tyco Electronics
Tyco Electronics Corporation
Bideford, UK, EX39 4HE

NAME: SMA RIGHT ANGLE CRIMP ATTACHMENT CAPTIVE CONTACT RG58C/U, 141A/U, URM43, URM76, KX15

| SIZE | CAGE CODE | DRAWING NO | RESTRICTED TO |
|---|---|---|---|
| A3 | 00779 | C-1478923 | – |

CUSTOMER DRAWING | SCALE 1:1 | SHEET 1 OF 1 | REV A