THIS DRAWING IS UNPUBLISHED. RELEASED FOR PUBLICATION AUG ,2006.
© COPYRIGHT – BY TYCO ELECTRONICS CORPORATION. ALL RIGHTS RESERVED.

LOC	DIST
DW	–

REVISIONS

P	LTR	DESCRIPTION	DATE	DWN	APVD
	E	REVISED. (ECR-10-026339)	23MAY11	JC	WK

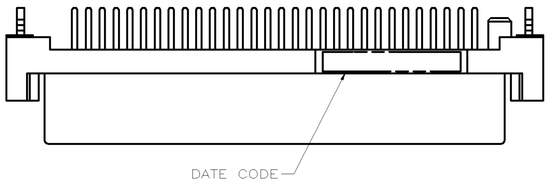

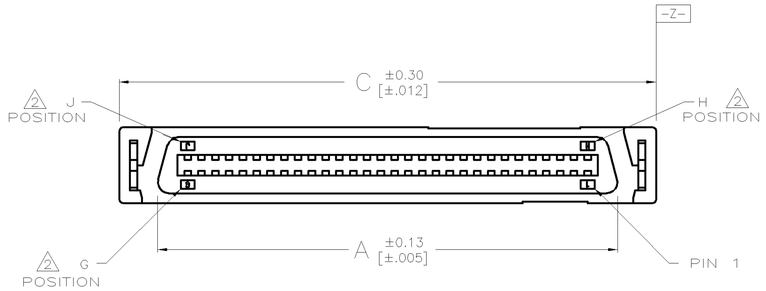

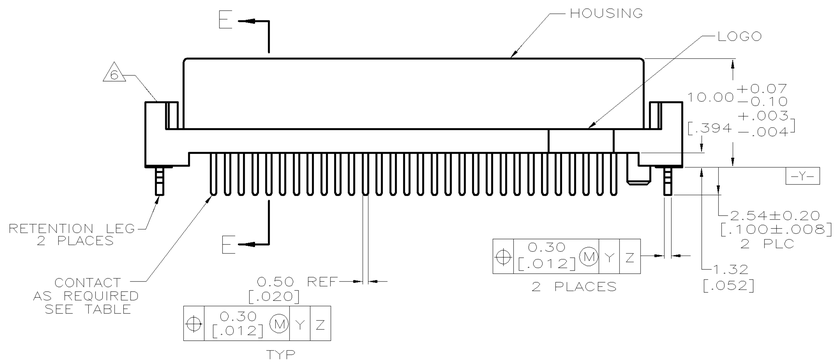

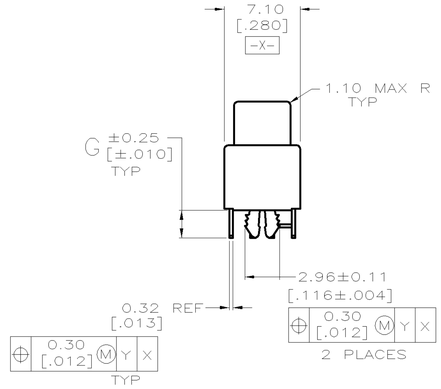

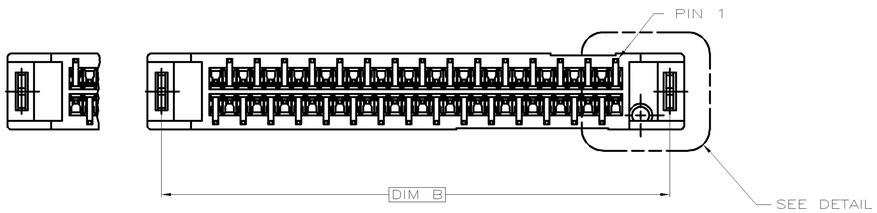

1. MATERIALS:
   HOUSING– PPA RESIN, BLACK, MOLDING COMPOUND.
   CONTACTS– PHOSPHOR BRONZE PLATED WITH MINIMUM THICK (SEE TABLE) GOLD IN CONTACT AREA AND 3.8μm [.000150] MINIMUM THICK MATTE TIN ON SOLDER TINES OVER 1.27μm [.000050] MINIMUM THICK NICKEL UNDERPLATE.
   RETENTION LEG– BRASS PLATED WITH 3.8μm [.000150] MINIMUM TIN–Cu OVER 1.3μm [.000051] MINIMUM NICKEL UNDERPLATE.
2. G, J, AND H INDICATE NUMBER OF POSITION MARKED ON ASSEMBLY. ALSO SEE TABLE.
3. ALL DIMENSIONS SHOWN ARE MAXIMUM UNLESS OTHERWISE SPECIFIED.
4. 60 POSITION AS SHOWN.
5. RETENTION LEGS NOT PRESENT.
6. TOP OF RETENTION LEG MAY NOT PROTRUDE ABOVE THIS SURFACE.
7. HOUSING BOW UP TO 0.30 [.012] ALLOWED.
8. CONNECTOR WILL ACCOMMODATE MATING PRINTED CIRCUIT BOARD OF 1.6±0.07 [.063±.003] THICKNESS.
9. AIWAYS RoHS/ELV COMPLIANT.
10. WAVE SOLDER CAPABLE TO 265°C PER TE SPEC 109–202, CONDITION B.
11. REMOVE CONTACT POSITION FROM #11~#17 AND #36~#42.
12. RECOMMEND CARD EDGE DIM. (PAGE2)
13. GOLD FLASH OVER 0.762μm [30μ"] MIN. PALLADIUM–NICKEL PLATED.

PCB THICKNESS	G	F 12	C	B	A	G 2	J 2	H 2	GOLD PLATED	PART NUMBER	Note	POS.
2.36 [.093]	3.30 [.130]	127.43 [5.017]	138.35 [5.447]	135.71 [5.343]	131.27 [5.168]	100	200	101	GOLD FLASH	5–1734101–6	7	200
									0.381um[15u"]	3–1734101–6		
									13	1–1734101–6		
0.8–1.6 [.031–.063]	2.54 [.100]	127.43 [5.017]	138.35 [5.447]	135.71 [5.343]	131.27 [5.168]	100	200	101	GOLD FLASH	5–1734101–5		
									0.381um[15u"]	3–1734101–5		
									13	1–1734101–5		
0.8–1.6 [.031–.063]	2.54 [.100]	102.03 [4.017]	112.95 [4.447]	110.31 [4.343]	105.87 [4.168]	80	160	81	GOLD FLASH	5–1734101–4	7	160
									0.381um[15u"]	3–1734101–4		
									13	1–1734101–4		
2.36 [.093]	3.30 [.130]	76.63 [3.017]	87.55 [3.447]	84.91 [3.343]	80.47 [3.168]	60	120	61	GOLD FLASH	5–1734101–3		120
									0.381um[15u"]	3–1734101–3		
									13	1–1734101–3		
0.8–1.6 [.031–.063]	2.54 [.100]	76.63 [3.017]	87.55 [3.447]	84.91 [3.343]	80.47 [3.168]	60	120	61	GOLD FLASH	5–1734101–2		
									0.381um[15u"]	3–1734101–2		
									13	1–1734101–2		
2.36 [.093]	3.30 [.130]	63.93 [2.517]	74.85 [2.947]	72.21 [2.843]	67.77 [2.668]	50	100	51	GOLD FLASH	5–1734101–1		100
									0.381um[15u"]	3–1734101–1		
									13	1–1734101–1		
0.8–1.6 [.031–.063]	2.54 [.100]	63.93 [2.517]	74.85 [2.947]	72.21 [2.843]	67.77 [2.668]	50	100	51	GOLD FLASH	5–1734101–0		
									0.381um[15u"]	3–1734101–0		
									13	1–1734101–0		
0.8–1.6 [.031–.063]	2.54 [.100]	51.23 [2.017]	62.15 [2.447]	59.51 [2.343]	55.07 [2.168]	40	80	41	GOLD FLASH	5–1734101–8	6	80
									0.381um[15u"]	3–1734101–8		
									13	1–1734101–8		
2.36 [.093]	3.30 [.130]	51.23 [2.017]	62.15 [2.447]	59.51 [2.343]	55.07 [2.168]	40	80	41	GOLD FLASH	4–1734101–9		80
									0.381um[15u"]	6–1734101–9		
									13	1734101–9		
0.8–1.6 [.031–.063]	2.54 [.100]	51.23 [2.017]	62.15 [2.447]	59.51 [2.343]	55.07 [2.168]	40	80	41	GOLD FLASH	4–1734101–8		
									0.381um[15u"]	6–1734101–8		
									13	1734101–8		
0.8–1.6 [.031–.063]	2.54 [.100]	43.61 [1.717]	54.53 [2.147]	51.89 [2.043]	47.45 [1.868]	34	68	35	GOLD FLASH	4–1734101–7		68
									0.381um[15u"]	6–1734101–7		
									13	1734101–7		
2.36 [.093]	3.40 [.134]	38.53 [1.517]	49.45 [1.947]	46.81 [1.843]	42.37 [1.668]	30	60	31	GOLD FLASH	4–1734101–6		60
									0.381um[15u"]	6–1734101–6		
									13	1734101–6		
2.36 [.093]	3.30 [.100]	32.18 [1.267]	43.10 [1.697]	40.46 [1.593]	36.02 [1.418]	25	50	26	13	2–1734101–7	11	50
									GOLD FLASH	5–1734101–7		
									0.381um[15u"]	3–1734101–7		
									13	1–1734101–7		
0.8–1.6 [.031–.063]	2.54 [.100]	32.18 [1.267]	43.10 [1.697]	40.46 [1.593]	36.02 [1.418]	25	50	26	GOLD FLASH	4–1734101–5		
									0.381um[15u"]	6–1734101–5		
									13	1734101–5		
0.8–1.6 [.031–.063]	2.54 [.100]	25.83 [1.017]	36.75 [1.447]	34.11 [1.343]	29.67 [1.168]	20	40	21	GOLD FLASH	4–1734101–4		40
									0.381um[15u"]	6–1734101–4		
									13	1734101–4		
0.8–1.6 [.031–.063]	2.54 [.100]	– –	30.40 [1.197]	27.96 [1.101]	23.32 [.918]	15	30	16	GOLD FLASH	4–1734101–3		30
									0.381um[15u"]	6–1734101–3		
									13	1734101–3		

THIS DRAWING IS A CONTROLLED DOCUMENT.

DIMENSIONS: MM

TOLERANCES UNLESS OTHERWISE SPECIFIED:
0 PLC ± –
1 PLC ± –
2 PLC ± –
3 PLC ± –
4 PLC ± –
ANGLES ± –
3

MATERIAL: SEE NOTE
FINISH: SEE NOTE

DWN F. YANG 31MAR2009
CHK S. CHIEN 31MAR2009
APVD W. KODAMA 31MAR2009
PRODUCT SPEC 108–57876
QUALIFICATION TEST REPORT –
WEIGHT –

TE Connectivity

NAME
RECEPTACLE ASSEMBLY, VERTICAL, BOARD–TO–BOARD, CHAMP.050, SERIES I,

SIZE	CAGE CODE	DRAWING NO	RESTRICTED TO
A3	00779	C–1734101	–

CUSTOMER DRAWING | SCALE – | SHEET 1 OF 4 | REV E

THIS DRAWING IS UNPUBLISHED. RELEASED FOR PUBLICATION AUG ,2006.
© COPYRIGHT – BY TYCO ELECTRONICS CORPORATION. ALL RIGHTS RESERVED.

LOC	DIST
DW	—

REVISIONS

P	LTR	DESCRIPTION	DATE	DWN	APVD
		SEE SHEET 1.			

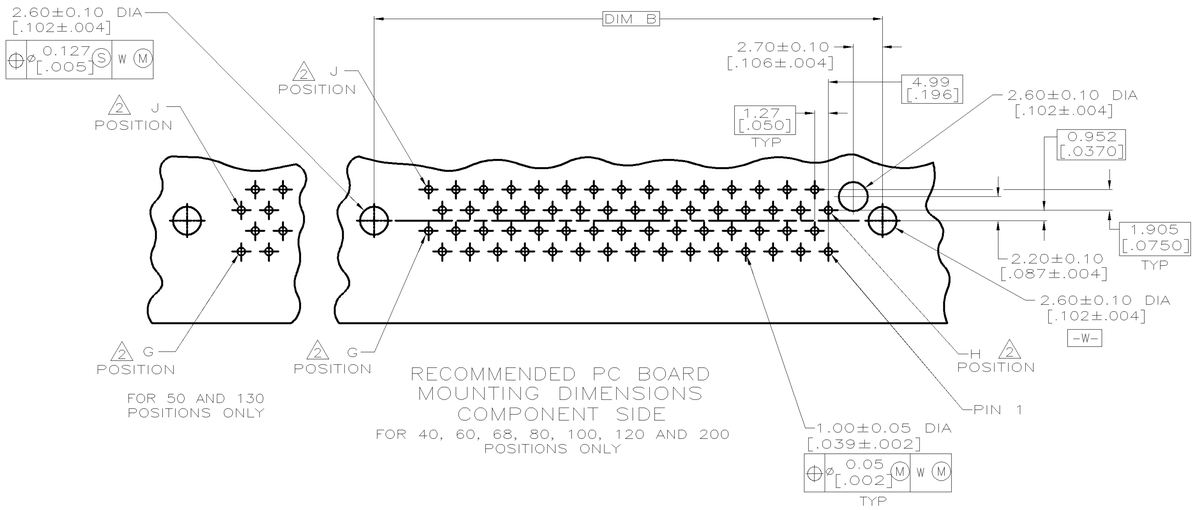

FOR 50 AND 130 POSITIONS ONLY

RECOMMENDED PC BOARD MOUNTING DIMENSIONS COMPONENT SIDE

FOR 40, 60, 68, 80, 100, 120 AND 200 POSITIONS ONLY

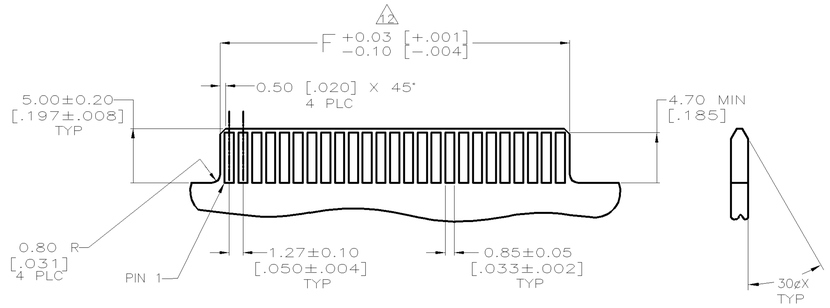

RECOMMENDED CARD EDGE LAYOUT

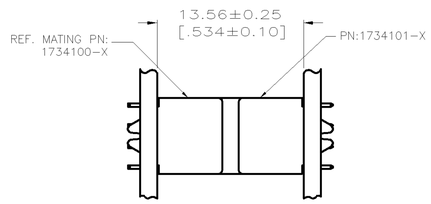

VERTICAL RECEPTACLE ASSEMBLY MATED TO VERTICAL PLUG ASSEMBLY

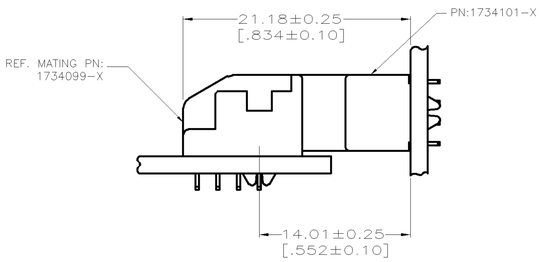

VERTICAL RECEPTACLE ASSEMBLY MATED TO VERTICAL PLUG ASSEMBLY

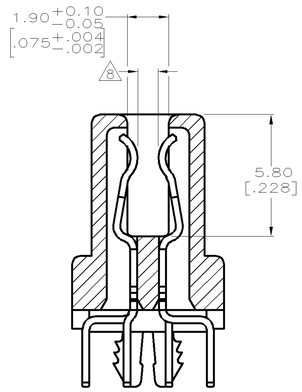

SECTION E–E
SCALE 8:1

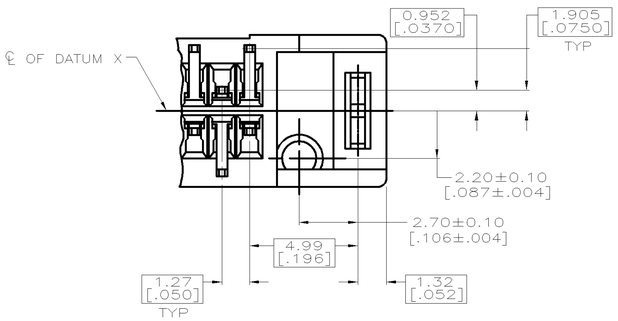

DETAIL D
SCALE 8:1

THIS DRAWING IS A CONTROLLED DOCUMENT.

DIMENSIONS: MM

TOLERANCES UNLESS OTHERWISE SPECIFIED:

0 PLC	± –
1 PLC	± –
2 PLC	± –
3 PLC	± –
4 PLC	± –
ANGLES	± –

MATERIAL –

FINISH –

DWN
CHK
APVD
PRODUCT SPEC —
QUALIFICATION TEST REPORT —
WEIGHT —

TE Connectivity

NAME
RECEPTACLE ASSEMBLY, VERTICAL, BOARD–TO–BOARD, CHAMP.050, SERIES I,

SIZE	CAGE CODE	DRAWING NO	RESTRICTED TO
A3	00779	C-1734101	—

CUSTOMER DRAWING | SCALE — | SHEET 2 OF 4 | REV E

THIS DRAWING IS UNPUBLISHED. RELEASED FOR PUBLICATION AUG ,2006.
© COPYRIGHT – BY TYCO ELECTRONICS CORPORATION. ALL RIGHTS RESERVED.

LOC	DIST
DW	—

REVISIONS

P	LTR	DESCRIPTION	DATE	DWN	APVD
		SEE SHEET 1.			

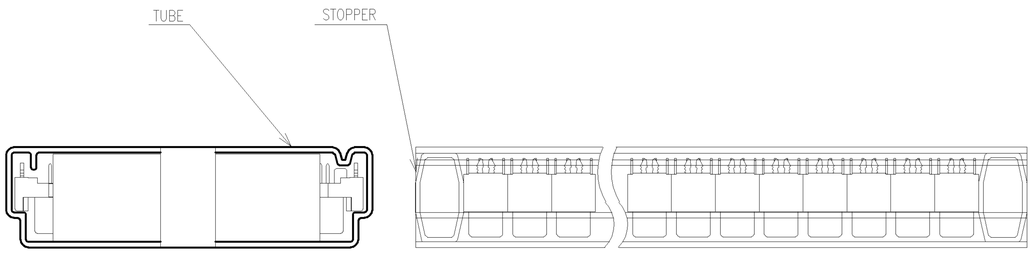

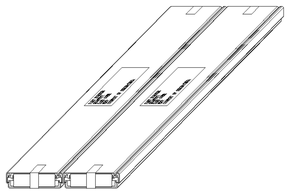

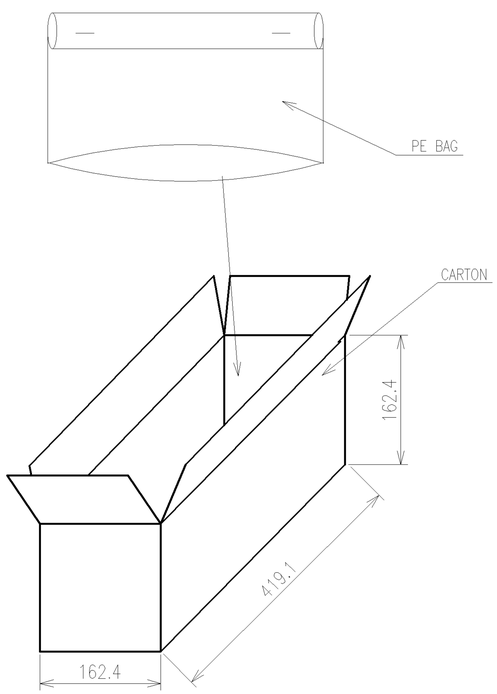

G.W./CARTON (KG)	N.W./CARTON (KG)	PCS/TUBE	TUBES/CARTON	QUANTITY/CARTON (PCS)	PART NUMBER	POS.
4.21	2.89	54	8	432	5–1734101–3	120
					3–1734101–3	
					1–1734101–3	
					5–1734101–2	
					3–1734101–2	
					1–1734101–2	
6.84	4.92	54	16	864	5–1734101–1	100
					3–1734101–1	
					1–1734101–1	
					5–1734101–0	
					3–1734101–0	
					1–1734101–0	
5.61	4.06	54	16	864	5–1734101–8	80
					3–1734101–8	
					1–1734101–8	
					4–1734101–8	
					6–1734101–8	
					1734101–8	
5.05	3.63	54	16	864	4–1734101–7	68
					6–1734101–7	
					1734101–7	
4.28	3.11	54	16	864	4–1734101–6	60
					6–1734101–6	
					1734101–6	
4.72	3.42	54	24	1296	2–1734101–7	50
5.32	4.02				5–1734101–7	
					3–1734101–7	
					1–1734101–7	
					4–1734101–5	
					6–1734101–5	
					1734101–5	
4.42	3.37	54	24	1296	4–1734101–4	40
					6–1734101–4	
					1734101–4	
6.25	5.36	54	32	1728	4–1734101–3	30
					6–1734101–3	
					1734101–3	

THIS DRAWING IS A CONTROLLED DOCUMENT.

DIMENSIONS: MM

TOLERANCES UNLESS OTHERWISE SPECIFIED:
0 PLC ± –
1 PLC ± –
2 PLC ± –
3 PLC ± –
4 PLC ± –
ANGLES ± –

MATERIAL –

FINISH –

DWN
CHK
APVD
PRODUCT SPEC —
QUALIFICATION TEST REPORT —
WEIGHT —

TE Connectivity

NAME
RECEPTACLE ASSEMBLY, VERTICAL, BOARD–TO–BOARD, CHAMP.050, SERIES I,

SIZE	CAGE CODE	DRAWING NO	RESTRICTED TO
A3	00779	C–1734101	—

CUSTOMER DRAWING

SCALE	SHEET	REV
—	3 OF 4	E

THIS DRAWING IS UNPUBLISHED. RELEASED FOR PUBLICATION AUG ,2006.
© COPYRIGHT – BY TYCO ELECTRONICS CORPORATION. ALL RIGHTS RESERVED.

LOC	DIST
DW	—

REVISIONS

P	LTR	DESCRIPTION	DATE	DWN	APVD
		SEE SHEET 1.			

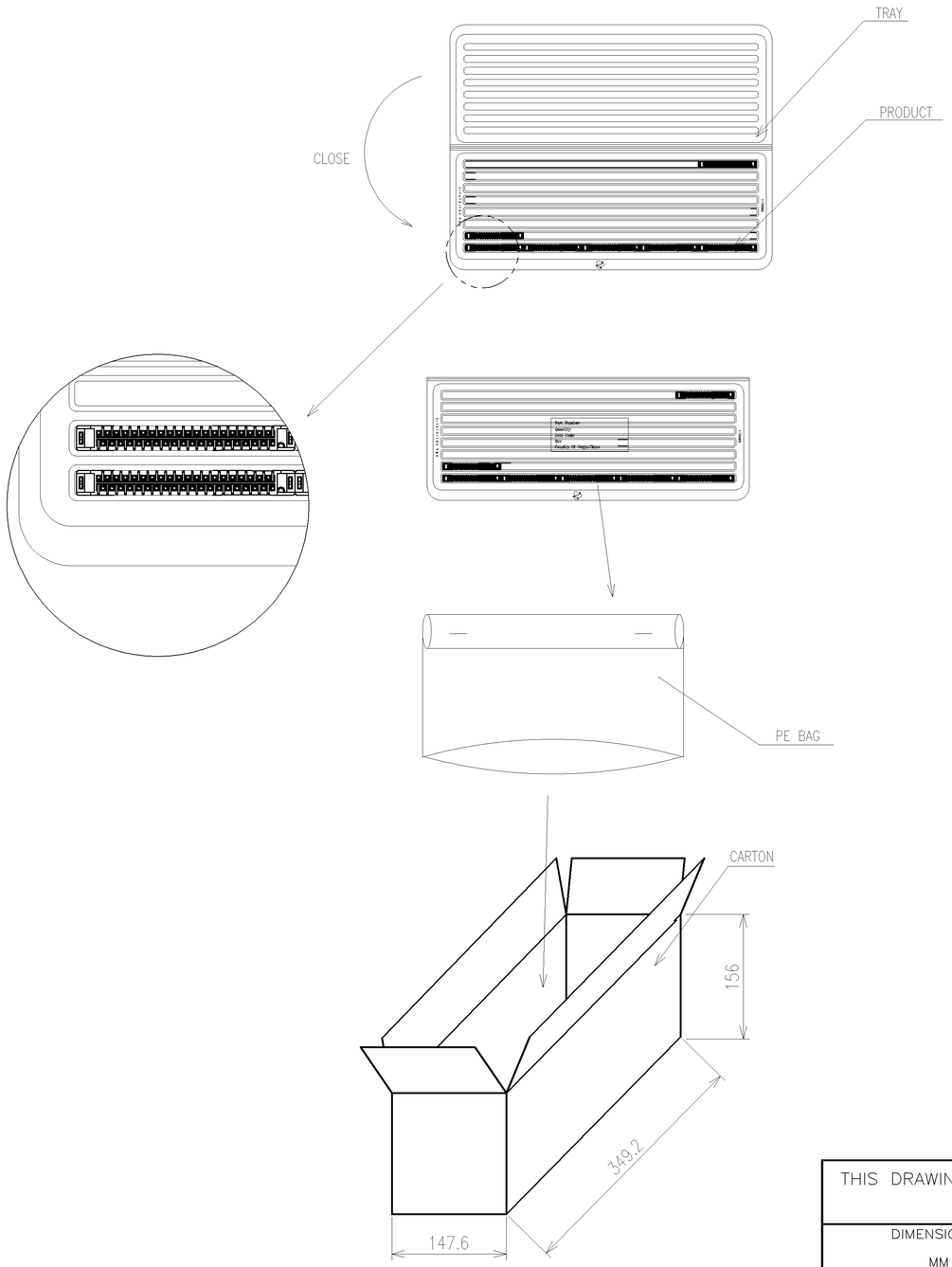

G.W./CARTON (KG)	N.W./CARTON (KG)	PCS/TRAY	TRAYS/CARTON	QUANTITY/CARTON (PCS)	PART NUMBER	POS.
2.69	1.71	16	10	160	5–1734101–6	200
					3–1734101–6	
					1–1734101–6	
					5–1734101–5	
					3–1734101–5	
					1–1734101–5	
2.37	1.39	16	10	160	5–1734101–4	160
					3–1734101–4	
					1–1734101–4	
2.48	1.50	32	10	320	4–1734101–9	80
					6–1734101–9	
					1734101–9	

THIS DRAWING IS A CONTROLLED DOCUMENT.

DIMENSIONS: MM

TOLERANCES UNLESS OTHERWISE SPECIFIED:
0 PLC ± –
1 PLC ± –
2 PLC ± –
3 PLC ± –
4 PLC ± –
ANGLES ± –

MATERIAL –

FINISH –

DWN
CHK
APVD
PRODUCT SPEC —
QUALIFICATION TEST REPORT —
WEIGHT —

TE Connectivity

NAME
RECEPTACLE ASSEMBLY, VERTICAL, BOARD–TO–BOARD, CHAMP.050, SERIES I,

SIZE	CAGE CODE	DRAWING NO	RESTRICTED TO
A3	00779	C–1734101	—

CUSTOMER DRAWING | SCALE — | SHEET 4 OF 4 | REV E