Distributed by:

JAMECO® ELECTRONICS

**www.Jameco.com ✦ 1-800-831-4242**

The content and copyrights of the attached material are the property of its owner.

Jameco Part Number 945514

WING MADE IN THIRD ANGLE PROJECTION

© COPYRIGHT 1963 BY AMP INCORPORATED, HARRISBURG, PA. ALL INTERNATIONAL RIGHTS RESERVED. AMP INCORPORATED PRODUCTS COVERED BY U. S. AND FOREIGN PATENTS AND/OR PATENTS PENDING.

LOC AF DIST 50

REVISIONS

| P | F | ZONE | LTR | DESCRIPTION | DATE | APPROVED |
|---|---|---|---|---|---|---|
| ✓ | ✓ | | A | REDRAWN & REVISED A-3943 | 5-1-78 | D. Eh SS |
| ✓ | ✓ | | B | REV PER AF-7197 | 1/22/81 | PMF/ GY |

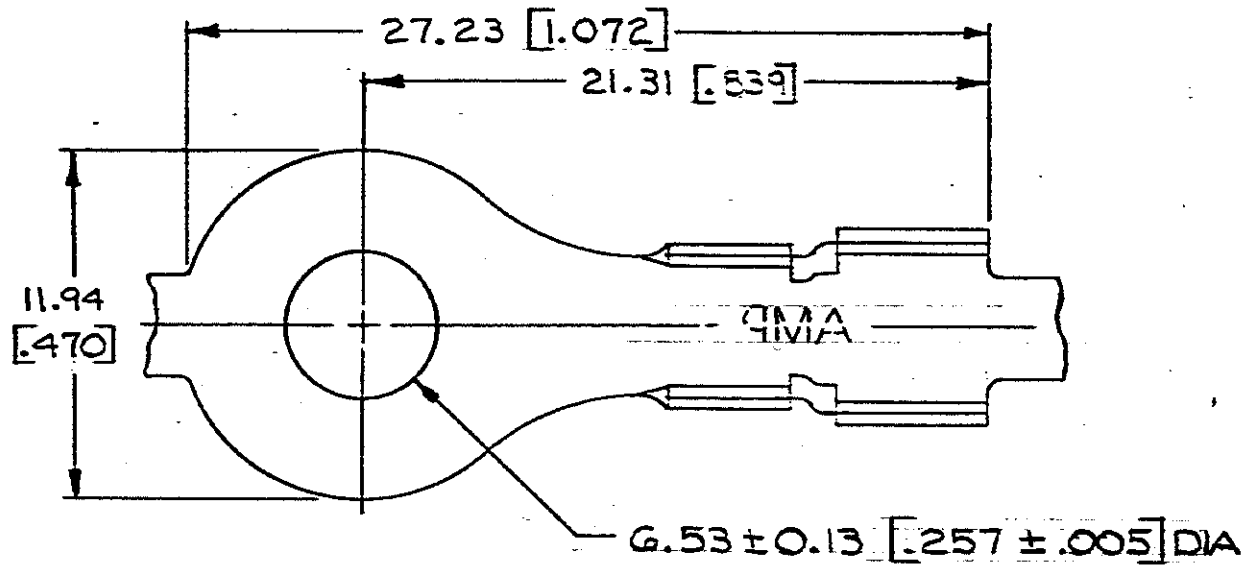


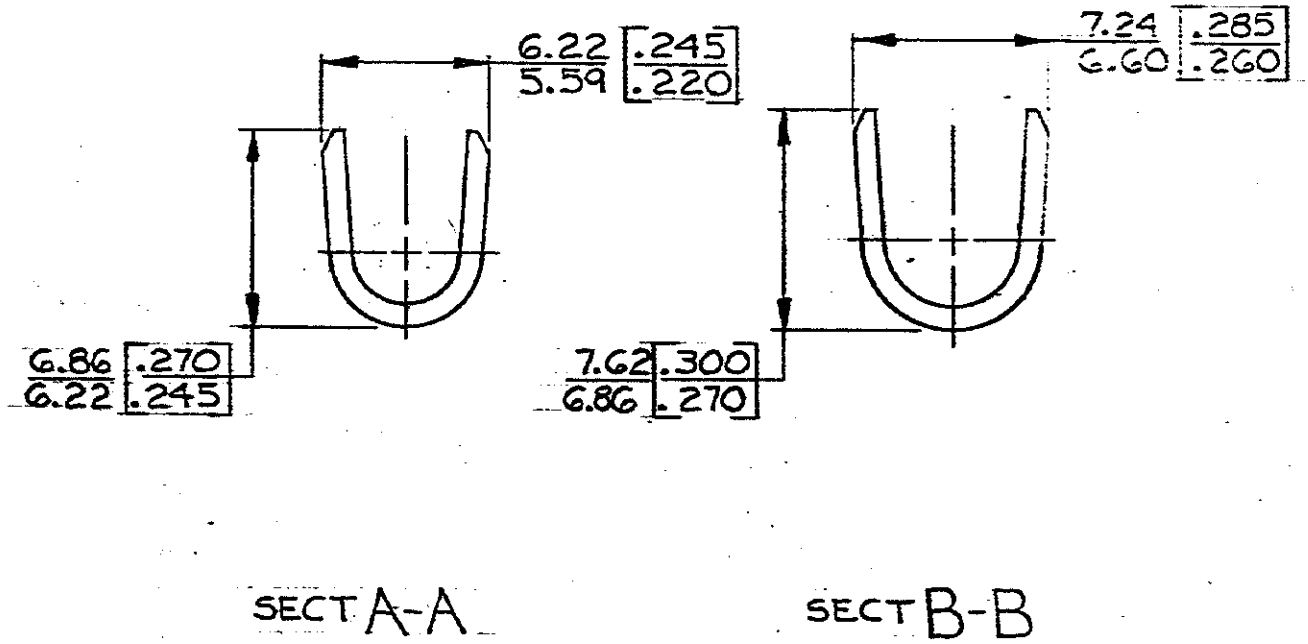


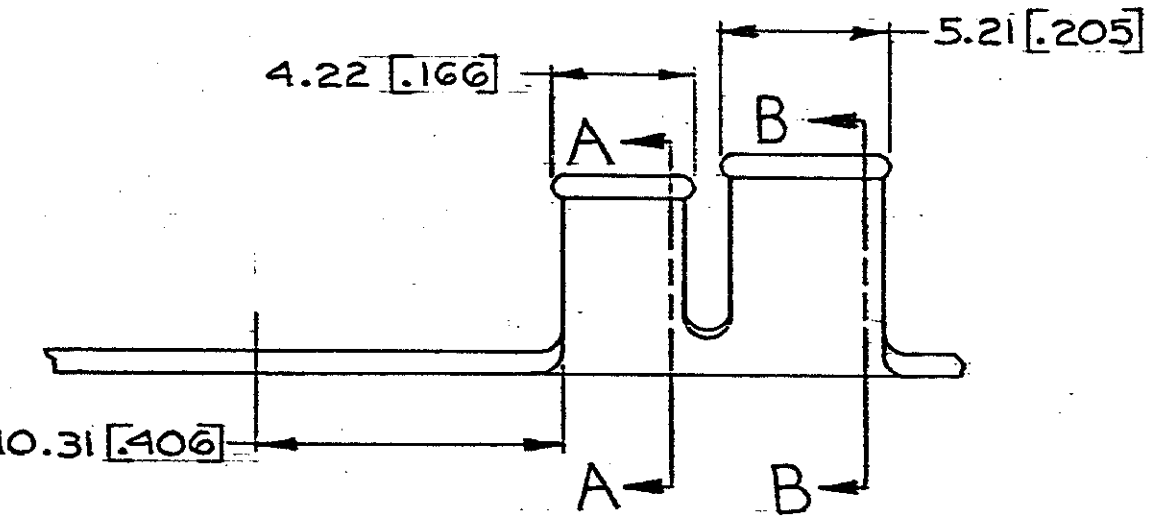


1. CONTINUOUS STRIP ON REELS
2. DIMENSIONS IN BRACKETS ARE IN INCHES.

METRIC

| STUD SIZE | WIRE RANGE | INSULATION RANGE | FINISH | MATERIAL | PART NO |
|---|---|---|---|---|---|
| — | 3.0-6.0 mm² [12-10] | 3.81-5.33 [.150-.210] | TIN | 0.76 [.030] BRASS | 41125 |

UNLESS OTHERWISE SPECIFIED DIMENSIONS ARE IN ~~INCHES~~ mm
TOLERANCES ON:
DECIMALS ±0.38 [.015]
ANGLES 1°0'

MATERIAL: SEE TABLE

FINISH: SEE TABLE

CONTRACT NO

DR [signature] 5-1-78

CHK S. Schaffhauser 7-25-75

APPD R.P. Frantz 8-1-78

APPD [signature] 8-1-78

DSGN APPD

OTHER APPD

AMP INCORPORATED Harrisburg, Pa.

NAME: RING

SIZE: B | CODE IDENT NO: 00779 | DRAWING NO: 41125

SCALE | SHEET

AMP 1470-15 (7-73)

CUSTOMER DRAWING