THIS DRAWING IS UNPUBLISHED. RELEASED FOR PUBLICATION -,- .
© COPYRIGHT - BY TYCO ELECTRONICS CORPORATION. ALL RIGHTS RESERVED.

LOC	DIST
GP	00

REVISIONS

P	LTR	DESCRIPTION	DATE	DWN	APVD
	D	REVISED PER ECO-06-018500	03AUG06	JDP	SLB

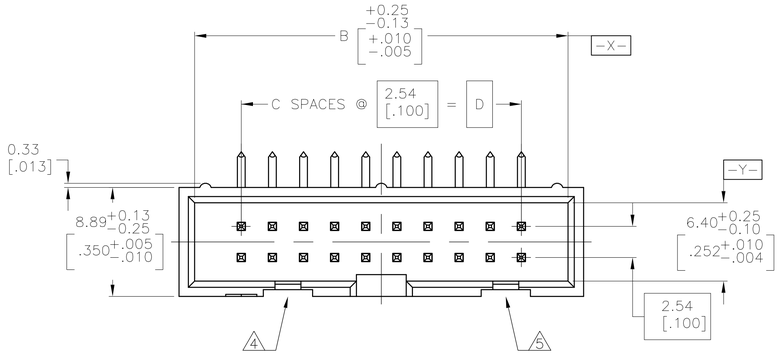

1. HOUSING: PBT, UL94V-0, COLOR (SEE TABLE).
   POSTS: PHOSPHOR BRONZE.
2. POSTS: 0.00076[.000030] MIN GOLD ON MATING AREA, 0.00254[.000100] MIN TIN ON SOLDER END, ALL OVER 0.00127[.000050] MIN NICKEL ON ENTIRE POST.
3. DATUMS S & T TO BE ESTABLISHED BY CUSTOMER.
4. NO KEYING SLOT ON THIS END FOR 6, 10, 12 & 14 POSITION ASSEMBLIES.
5. NO KEYING SLOT ON THIS END FOR 6 & 10 POSITION ASSEMBLIES.

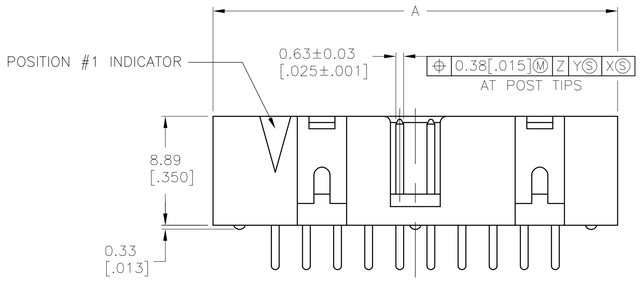

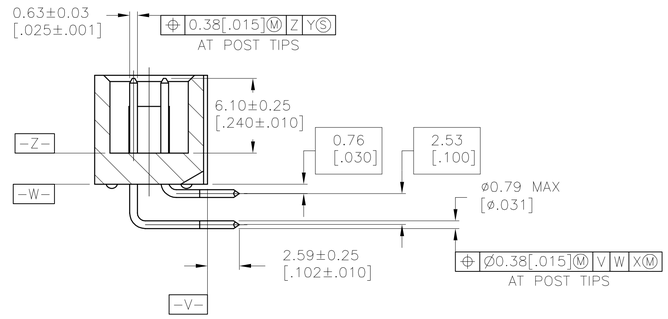

	BLUE	78.74 [3.100]	31	86.36 [3.400]	88.90 [3.500]	64	3-1761605-7
	BLUE	60.96 [2.400]	24	68.58 [2.700]	71.12 [2.800]	50	3-1761605-5
	BLUE	53.34 [2.100]	21	60.96 [2.400]	63.50 [2.500]	44	3-1761605-4
	BLUE	48.26 [1.900]	19	55.88 [2.200]	58.42 [2.300]	40	3-1761605-3
	BLUE	43.18 [1.700]	17	50.80 [2.000]	53.34 [2.100]	36	3-1761605-2
	BLUE	40.64 [1.600]	16	48.26 [1.900]	50.80 [2.000]	34	3-1761605-1
	BLUE	35.56 [1.400]	14	43.18 [1.700]	45.72 [1.800]	30	3-1761605-0
	BLUE	30.48 [1.200]	12	38.10 [1.500]	40.64 [1.600]	26	2-1761605-9
	BLUE	27.94 [1.100]	11	35.56 [1.400]	38.10 [1.500]	24	2-1761602-8
	BLUE	22.86 [.900]	9	30.48 [1.200]	33.02 [1.300]	20	2-1761605-7
	BLUE	17.78 [.700]	7	25.40 [1.000]	27.94 [1.100]	16	2-1761605-6
	BLUE	15.24 [.600]	6	22.86 [.900]	25.40 [1.000]	14	2-1761605-5
	BLUE	12.70 [.500]	5	20.32 [.800]	22.86 [.900]	12	2-1761605-4
	BLUE	10.16 [.400]	4	17.78 [.700]	20.32 [.800]	10	2-1761605-3
	BLUE	5.08 [.200]	2	12.70 [.500]	15.24 [.600]	6	2-1761605-1
	BLACK	73.66 [2.900]	29	81.28 [3.200]	83.82 [3.300]	60	1-1761605-6
	BLACK	60.96 [2.400]	24	68.58 [2.700]	71.12 [2.800]	50	1-1761605-5
OBSOLETE	BLACK	53.34 [2.100]	21	60.96 [2.400]	63.50 [2.500]	44	1-1761605-4
	BLACK	48.26 [1.900]	19	55.88 [2.200]	58.42 [2.300]	40	1-1761605-3
	BLACK	40.64 [1.600]	16	48.26 [1.900]	50.80 [2.000]	34	1-1761605-1
	BLACK	30.48 [1.200]	12	38.10 [1.500]	40.64 [1.600]	26	1761605-9
	BLACK	22.86 [.900]	9	30.48 [1.200]	33.02 [1.300]	20	1761605-7
	BLACK	17.78 [.700]	7	25.40 [1.000]	27.94 [1.100]	16	1761605-6
	BLACK	15.24 [.600]	6	22.86 [.900]	25.40 [1.000]	14	1761605-5
	BLACK	10.16 [.400]	4	17.78 [.700]	20.32 [.800]	10	1761605-3
	HOUSING COLOR	D	C	B	A	NO OF POS	PART NUMBER

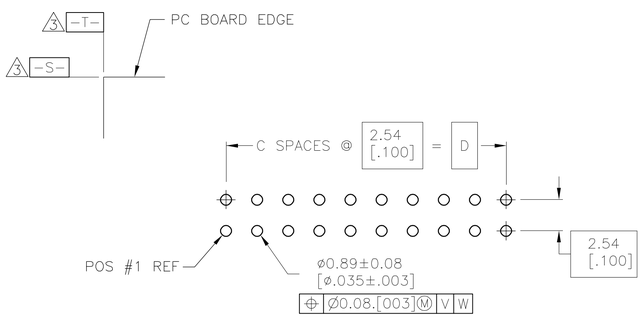

RECOMMENDED PC BOARD LAYOUT
(VIEWED FROM CONNECTOR SIDE)

COPYRIGHT 2005
TYCO ELECTRONICS CORP
ALL RIGHTS RESERVED

THIS DRAWING IS A CONTROLLED DOCUMENT.

DIMENSIONS: mm [INCHES]

TOLERANCES UNLESS OTHERWISE SPECIFIED:
0 PLC ± -
1 PLC ± -
2 PLC ± -
3 PLC ± 0.13[.005]
4 PLC ± -
ANGLES ± -

MATERIAL 1
FINISH 2

DWN	J.GERACE	11FEB05
CHK	S.BOLASH	11FEB05
APVD	M.WALMSLEY	11FEB05

PRODUCT SPEC —
APPLICATION SPEC —
WEIGHT —

tyco Electronics
Tyco Electronics Corporation
Harrisburg, PA 17105-3608

NAME: HEADER ASSEMBLY, RIGHT ANGLE, LOW PROFILE, IDC
—

SIZE	CAGE CODE	DRAWING NO	RESTRICTED TO
A1	00779	C-1761605	—

CUSTOMER DRAWING | SCALE 4:1 | SHEET 1 OF 1 | REV D