THIS DRAWING IS UNPUBLISHED. RELEASED FOR PUBLICATION
© COPYRIGHT copyright_date BY - ALL RIGHTS RESERVED.

LOC	DIST
A1	-

REVISIONS

F	LTR	DESCRIPTION	DATE	DWN	APVD
	B3	SEE ECR 12-016501	19SEP2012	JS	RS

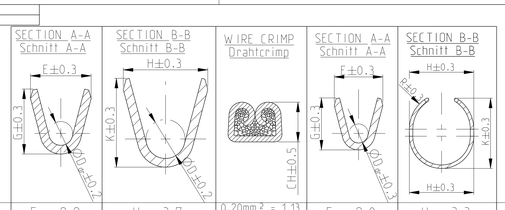

VERSION A

	927839-5	C	928989-5	CuFe2	vorversilbert PRESILVERED (2)	0.2 - 0.5 FLK	E = 2.2	H = 3.7	0.20mm² = 1.13	E = 2.0	H = 3.3	MQC- Applicator 878426-2	539635-1 WITH DIE: mit Matrize 539744-2	2.5	3.8	6.6	19.5	0.3	(8)
	927839-4	C	928989-4	CuSn4			G = 2.2	K = 3.8	0.25mm² = 1.15	G = 2.3	K = 3.45								
	927839-3	C	928989-3	CuSn4	(1)				0.35mm² = 1.19										
	927839-2	C	928989-2	CuSn4	vorverzinnt PRETINNED		D_{br} = 0.8	D = 2.0	0.50mm² = 1.26	D_{br} = 0.8	R = 1.9								
	927839-1	C	928989-1	CuFe2															
	927827-2	C	927828-2	CuSn4	vorverzinnt PRETINNED	0.5 - 1.0 FLK	E = 2.8	H = 4.5	0.5mm² = 1.38	E = 2.2	H = 3.6	MQC- Applicator 2-541689-2	539733-2 WITH DIE: mit Matrize 734249-0	3	4.2	5.8	19.5	0.4	
	927827-1	C	927828-1	CuFe2			G = 3.0	K = 4.7	0.75mm² = 1.47	G = 3.1	K = 4.3								
							D_{br} = 1.1	D = 2.4	1.0mm² = 1.56	D_{br} = 1.1	R = 2.1								
	927833-5	D	927834-5	CuFe2	(2)	>1.0 - 2.5 FLK	E = 3.8	H = 5.7	1.5mm² = 1.76	E = 3.1	H = 4.4	MQC- Applicator 878367-2	539635-1 WITH DIE: mit Matrize 539733-2	3.5	4.7	6.3	19.5	0.4	
	927833-2	D	927834-2	CuSn4	vorverzinnt PRETINNED		G = 4.1	K = 5.8	2.0mm² = 1.90	G = 4.2	K = 5.25								
	927833-1	D	927834-1	CuFe2			D_{br} = 1.6	D = 3.6	2.5mm² = 2.04	D_{br} = 1.7	R = 2.6								
	927824-2	C	927825-2	CuSn4	vorverzinnt PRETINNED	>2.5 - 4.0 FLK	E = 4.6	H = 6.3	3.0mm² = 2.13	E = 3.6	H = 5.5	MQC- Applicator 2-878314-2	539635-1 WITH DIE: mit Matrize 539734-2	4	5.2	6.8	19.5	0.6	
	927824-1	C	927825-1	CuFe2			G = 4.8	K = 6.6	3.5mm² = 2.24	G = 4.95	K = 5.7								
							D_{br} = 2.4	D = 4.0	4.0mm² = 2.35	D_{br} = 2.3	R = 3.1								
	963709-7	C	-	CuFe2	(3)	4.0 - 6.0 FLK	E = 5.2	H = 7.3	4.0mm² = 2.17	-	-	MQC- Applicator 2-878738-2	-	4.2	5.6	7.7	20	0.6	
	963709-5	C	963714-5	CuFe2	vorversilbert PRESILVERED (2)		G = 5.5	K = 7.6	5.0mm² = 2.36	E = 4.4	H = 5.8								
	963709-4	C	963714-4	CuSn4						G = 5.7	K = 6.65								
	963709-3	C	963714-3	CuSn4	(1)				6.0mm² = 2.55										
	963709-2	C	963714-2	CuSn4	vorverzinnt PRETINNED		D_{br} = 2.9	D = 4.5		D_{br} = 2.9	R = 3.3								
	963709-1	C	963714-1	CuFe2															
	1-1241818-6	B	1-1241819-6	CuNiSi	(10)												20.4		
	1241818-5	B	1241819-5	CuFe2	(2)														
	1241818-1	B	1241819-1	CuFe2	vorverzinnt PRETINNED														
	927840-7	C	928990-7	CuFe2	(3)	0.2 - 0.5 FLR	E = 2.2	H = 2.8	0.2mm² = 1.13	E = 2.0	H = 2.5	MQC- Applicator 878427-2	-	2.5	3.8	6.4	19.5	0.3	(8)
	927840-5	C	928990-5	CuFe2	vorversilbert PRESILVERED (2)		G = 2.2	K = 2.8	0.35mm² = 1.19	G = 2.3	K = 2.7								
	927840-4	C	928990-4	CuSn4															
	927840-3	C	928990-3	CuSn4	(1)				0.5mm² = 1.26										
	927840-2	C	928990-2	CuSn4	vorverzinnt PRETINNED		D_{br} = 0.8	D = 1.4		D_{br} = 0.8	R = 1.4								
	927840-1	C	928990-1	CuFe2															
	1-927831-5	C	1-927832-5	CuFe2	(1)	0.5 - 1.0 FLR	E = 2.8	H = 3.9	0.5mm² = 1.43	E = 2.2	H = 3.1	MQC- Applicator 878328-2	169400-0 WITH DIE: mit Matrize 734781-1	3	4.2	5.8	19.5	0.4	
	927831-7	C	927832-7	CuFe2	(3)		G = 3.0	K = 4.1	0.75mm² = 1.52	G = 3.1	K = 3.7								
	927831-5	C	927832-5	CuFe2	vorversilbert PRESILVERED (2)				1.0mm² = 1.61										
	927831-4	C	927832-4	CuSn4			D_{br} = 1.1	D = 1.8		D_{br} = 1.1	R = 1.8								
	927831-3	C	927832-3	CuSn4	(1)														
	927831-2	C	927832-2	CuSn4	vorverzinnt PRETINNED														
	927831-1	C	927832-1	CuFe2															
	1-927837-5	C	1-927838-5	CuFe2	(1)	>1.0 - 2.5 FLR	E = 3.8	H = 4.8	1.25mm² = 1.69	E = 3.1	H = 3.8	MQC- Applicator 878356-2	169400-0 WITH DIE: mit Matrize 734251-0	3.5	4.7	6.3	19.5	0.4	
	927837-7	D	927838-7	CuFe2	(3)		G = 4.1	K = 4.9	1.5mm² = 1.76	G = 4.2	K = 4.4								
	927837-6	D	927838-6	CuFe2	(4)				2.0mm² = 1.90										
	927837-5	D	927838-5	CuFe2	vorversilbert PRESILVERED (2)		D_{br} = 1.6	D = 2.6	2.5mm² = 2.04	D_{br} = 1.7	R = 2.3								
	927837-4	D	927838-4	CuSn4															
	927837-3	D	927838-3	CuSn4	(1)														
	927837-2	D	927838-2	CuSn4	vorverzinnt PRETINNED														
	927837-1	D	927838-1	CuFe2															
	1-927829-5	D	1-927830-5	CuFe2	(1)	>2.5 - 4.0 FLR	E = 4.6	H = 5.5	3.0mm² = 2.13	E = 3.6	H = 4.4	MQC- Applicator 2-878384-2	169400-0 WITH DIE: mit Matrize 734251-0	4	5.2	6.8	19.5	0.6	
	927829-5	D	927830-5	CuFe2	(2)		G = 4.8	K = 5.7	3.5mm² = 2.24	G = 4.95	K = 4.95								
	927829-2	D	927830-2	CuSn4	vorverzinnt PRETINNED														
	927829-1	D	927830-1	CuFe2			D_{br} = 2.4	D = 3.3	4.0mm² = 2.35	D_{br} = 2.3	R = 2.6								

VERSION B

	2-927836-2	C	2-929922-2	CuSn4	(5)	0.5 - 1.0 FLR	E = 2.8	H = 7.6	0.5mm² = 1.43	E = 2.2	H = 7.0	MQC- Applicator 878337-2	539635-1 WITH DIE: mit Matrize 739736-2	3	5.4	7.2	20	1.25	963243-1 963244-1	100132-1	
	1-927836-2	C	1-929922-2	CuFe2	(5)		G = 3.0	K = 7.7	0.75mm² = 1.52	G = 3.1	K = 6.9										
	927836-7	C	929922-7	CuFe2	(3)				1.0mm² = 1.61												
	927836-2	C	929922-2	CuSn4	vorverzinnt PRETINNED		D_{br} = 1.1	D = 5.6		D_{br} = 1.1	R = 4.1										
	927836-1	C	929922-1	CuFe2																	
	2-927835-2	C	2-929923-2	CuSn4	(5)	>1.0 - 2.5 FLR	E = 3.8	H = 7.6	1.5mm² = 1.76	E = 3.1	H = 7.0	MQC- Applicator 878338-2	539635-1 WITH DIE: mit Matrize 539736-2	3.5	5.9	7.7	20	1.25	963244-1 963245-1	100132-1	
	2-927835-1	C	2-929923-1	CuFe2	(6)		G = 4.1	K = 7.7	2.0mm² = 1.90	G = 4.2	K = 6.9										
	1-927835-3	C	1-929923-3	CuFe2	(6)				2.5mm² = 2.04												
	1-927835-2	C	1-929923-2	CuFe2	(5)		D_{br} = 1.6	D = 5.6		D_{br} = 1.7	R = 4.1										
	927835-7	C	929923-7	CuFe2	(3)																
	927835-2	C	929923-2	CuSn4	vorverzinnt PRETINNED																
	927835-1	C	929923-1	CuFe2																	
	2-928966-2	D	2-929924-2	CuSn4	(5)	>2.5 - 4.0 FLR	E = 4.6	H = 7.6	3.0mm² = 2.13	E = 3.6	H = 7.0	MQC- Applicator 878441-2	539635-1 WITH DIE: mit Matrize 539736-2	4	5.9	7.7	20	1.25	963245-1	100132-1	
	2-928966-1	D	2-929924-1	CuSn4	(6)		G = 4.8	K = 7.7	-	G = 4.95	K = 6.9										
	1-928966-3	D	1-929924-3	CuFe2	(6)				4.0mm² = 2.35												
	1-928966-2	D	1-929924-2	CuFe2	(5)		D_{br} = 2.4	D = 5.6		D_{br} = 2.3	R = 4.1										
	928966-7	D	929924-7	CuFe2	(3)																
	928966-2	D	929924-2	CuSn4	vorverzinnt PRETINNED																
	928966-1	D	929924-1	CuFe2																	
	1241962-1	B	1241963-1	CuFe2	vorverzinnt PRETINNED	>3.0 - 5.0 FLR	E = 4.8	H = 8.15	3.0mm² = 2.25	E = -		MQC- Applicator -	- WITH DIE: mit Matrize -	4	5.9	7.7	20	1.25	967011-1 963245-1	100132-1	(7)
							G = 5.2	K = 7.8	4.0mm² = 2.50	G = -											
							D_{br} = 2.5	D = 6.0	5.0mm² = 2.75	D_{br} = -											
	TE Connectivity ORDER - NO	REV	TE Connectivity ORDER - NO	MATERIAL Werkstoff	SURFACE Oberflaeche	DGB WIRE RANGE (mm²)	WIRE CRIMP Drahtcrimp	INSUL-CRIMP Isol - crimp	CRIMP HEIGHT Crimp-Hoehe	WIRE CRIMP Drahtcrimp	INSUL-CRIMP Isol - crimp	APPLICATION TOOL Anschlag-WKZ	HAND TOOL Handzange	A	B	C	D	E	SINGLE WIRE SEAL Einzeldichtung	DEAD END PLUG Blindstopfen	
	STRIP FORM Bandware		LOOSE PIECE Einzelauf Ohrung				SRTIP FORM / Bandware			LOOSE PIECE / Einzelausfuehrung		EXTRACTION TOOL Ausdruckwerkzeug Nr.:726503-1							TE CONNECTIVITY ORDER - No.		
							CRIMP DIMENSIONS (mm) Crimpabmessungen (mm)														

VERSION A
(UNSEALED/ ungedichtet)

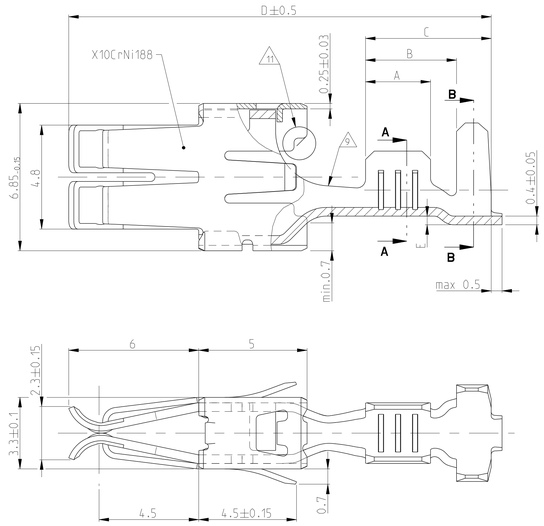

VERSION B
(SINGLE WIRE SEAL/
Einzel-Dichtungs-System)

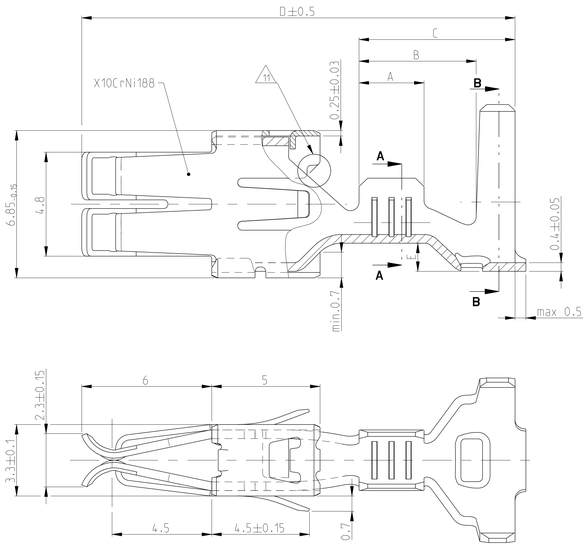

NOTES
Bemerkungen

(1) CONTACT ZONE SELECTIVE
PRE SILVER PLATED MIN 3-4.5 µm
Kontaktzone selektiv
vorversilbert min. 3-4.5 µm

(2) CONTACT ZONE SELECTIVE
PRE SILVER PLATED MIN 1-1.5 µm
Kontaktzone selektiv
vorversilbert min. 1-1.5 µm

(3) CONTACT BODY: ELECTRO TIN PLATED OVER NICKEL
CONTACT AREA: GOLD PLATED
Kontaktkoerper: gal. verzinnt ueber Nickel
Kontaktzone: vergoldet

(4) CONTACT BODY: ELECTRO TIN PLATED OVER NICKEL
CONTACT AREA: SELECTIVE NICKEL PLATED 2-4 µm
Kontaktkoerper: gal. verzinnt ueber Nickel
Kontaktzone: selektiv vernickelt 2-4 µm

(5) CONTACT BODY: ELECTRO TIN PLATED OVER NICKEL
TOUCHING AREA TO CANTILEVER SPRING:
SELECTIVE AU PLATED OVER NICKEL
CANTILEVER SPRING: COMPLETELY AU PLATED
Kontaktkoerper: gal. verzinnt ueber Nickel
Anlageflaeche zur Ueberfeder
selektiv Au ueber Ni beschichtet
Ueberfeder: komplett Au beschichet

(6) CONTACT BODY: ELECTRO TIN PLATED OVER NICKEL
TOUCHING AREA TO CANTILEVER SPRING AND CONTACT AREA
SELECTIVE AU PLATED OVER NICKEL
CANTILEVER SPRING: COMPLETELY AU PLATED
Kontaktkoerper: gal. verzinnt ueber Nickel
Anlageflaeche zur Ueberfeder Kontaktzone
selektiv Au ueber Ni beschichtet
Ueberfeder: komplett Au beschichet

(7) PREFORMT ISO-AREA
ONLY FOR PN: 1241962-1
Isoflanken vorgeformt
nur bei PN:1241962-1

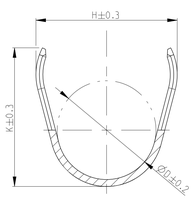

SECTION B-B
Schnitt B-B

(8) WRAP CRIMP
ONLY FOR PN:927839.927840
928989 AND 928990
Umfassungscrimp
nur bei PN: 927839.927840.928989 und 928990

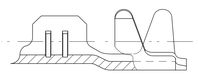

(9) TRANSITION ONLY FOR PN 927827.927828.927829.
927830.927833.927834.927837.AND 927838
Uebergang nur fuer PN 927827.927828.927829.
927830.927833.927834.927837.und 927838

(10) 1-3 µm Sn28M LAYER FOR HIGHER
TEMPERATURE REQUIREMENTS
1-3 µm Sn28M Schicht fuer hoehere
Temperaturanforderungen

(11) DOTTED LINE IS ALTERNATIVE SHAPE
Gestrichelte Linie alternative Form

THIS DRAWING IS A CONTROLLED DOCUMENT.

DIMENSIONS: mm

TOLERANCES UNLESS OTHERWISE SPECIFIED:
.XX ±0.2mm
.XXX ±0.05mm
ANGLES ±2°

EXTRACTION TOOL 1-1579007-6 968107-1

MATERIAL -

FINISH -

DWN	M.PFEILSCHIFTER	06APR2011
CHK	V.HUHN	17MAY2000
APVD	M.BLEICHER	17MAY2000
PRODUCT SPEC	108-18025	
APPLICATION SPEC	114-18037	
WEIGHT	-	

TE Connectivity

NAME: STANDARD POWER TIMER CONTACT
Standard Power Timer Kontakt

SIZE	CAGE CODE	DRAWING NO	RESTRICTED TO
A0	00779	C-1355048	-

Customer Drawing

SCALE	SHEET	REV
10:1	1 OF 1	B3

4806 (3/11)