THIS DRAWING IS UNPUBLISHED. RELEASED FOR PUBLICATION 20
© COPYRIGHT 20 BY - ALL RIGHTS RESERVED.

LOC	DIST
-	-

REVISIONS

P	LTR	DESCRIPTION	DATE	DWN	APVD
	E	REV PER RTS-530595-1	12SEP2011	RJM3	STM
	F	REL. PER ECO-11-018432	12SEP2011	RJM3	BM
	C	ADDED DASH 2	01JUNE2010	STM	STM
	D	PART MARKING AND FORMAT UPDATED	24MAR2011	RJM3	STM

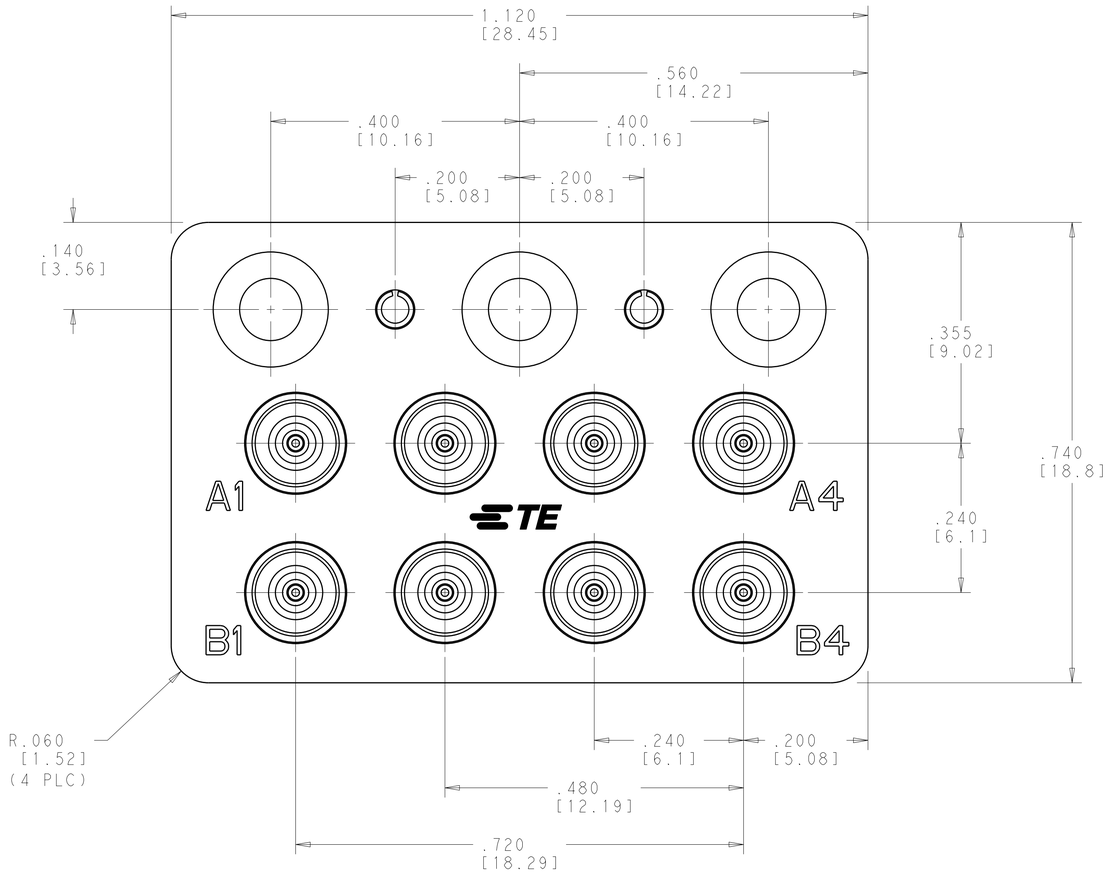

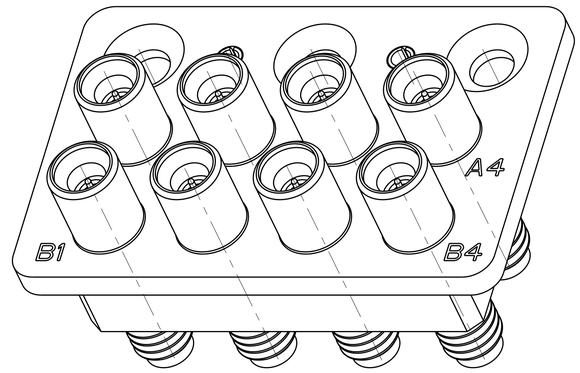

SCALE 6:1

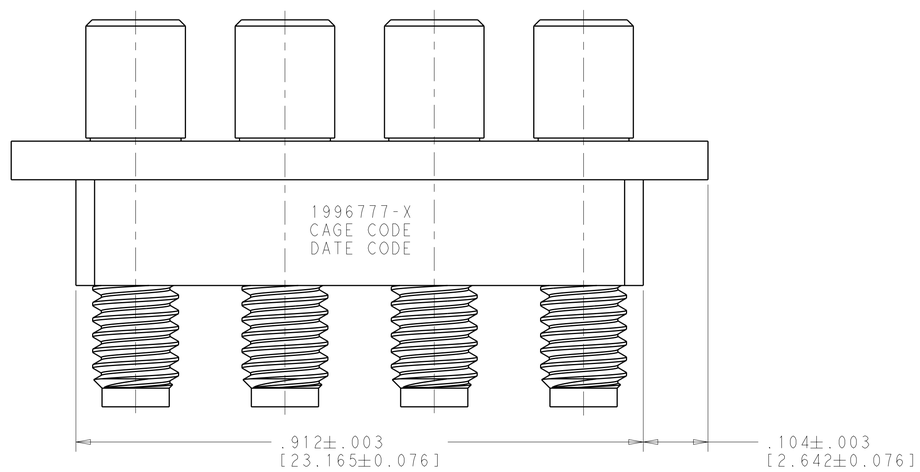

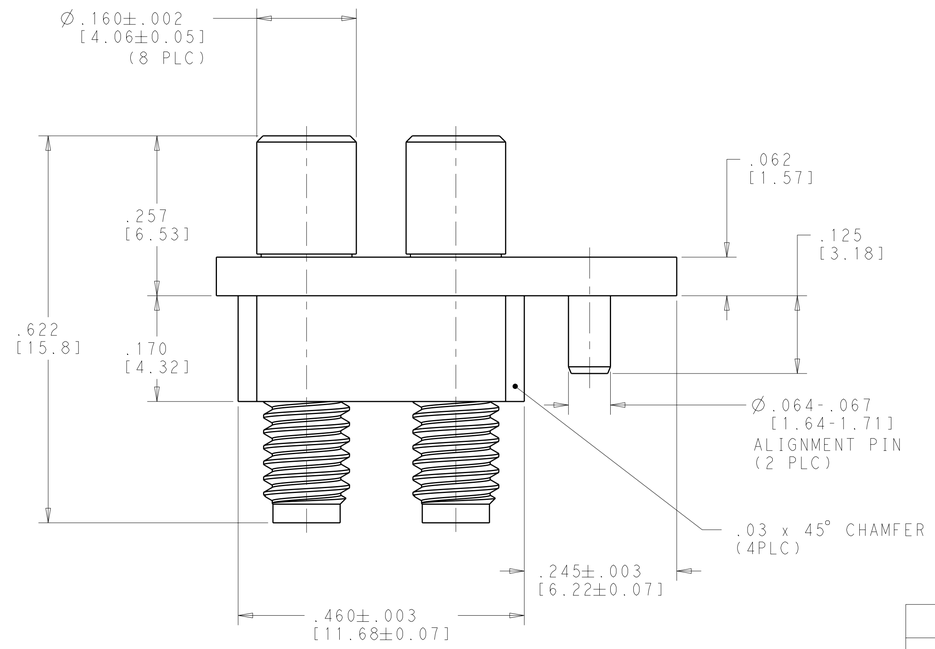

1. MATERIAL: SMOOTHBORE SMPM CONNECTOR BODY & CENTER CONTACT - BERYLIUM COPPER, ALLOY UNS C17300 CONDITION TD04, PER ASTM B196.
INSULATORS - TEFLON (PTFE) ROD, PER ASTM D 1710.
MODULE BODY & OSMM CONNECTORS - STAINLESS STEEL, PER UNS S30300
SLOTTED SPRIN PIN - NICKEL STAINLESS STEEL

2. FINISH: MODULE BODY, CONNECTOR BODIES & CENTER CONTACT - GOLD PLATE OVER NICKEL
SLOTTED SPRING PIN - PASSIVATED

3. FINISH: MODULE BODY, OSMM CONNECTOR BODY & SLOTTED SPRING PIN - PASSIVATED
SMOOTHBORE SMPM CONNECTOR BODY & CENTER CONTACT - GOLD PLATE OVER NICKEL

3	1996777-2
2	1996777-1
SURFACE FINISH	PART NUMBER

THIS DRAWING IS A CONTROLLED DOCUMENT.

DIMENSIONS: INCHES

TOLERANCES UNLESS OTHERWISE SPECIFIED:
0 PLC ±-
1 PLC ±.1
2 PLC ±.01
3 PLC ±.001
4 PLC ±.0005
ANGLES ±-

MATERIAL 1

FINISH SEE TABLE

DWN RJM3 04FEB2011
CHK STM 04FEB2011
APVD STM 04FEB2011
PRODUCT SPEC -
APPLICATION SPEC -
WEIGHT -

TE Connectivity

NAME 8 POSITION P.C.B. MOUNT RF MODULE, OSMM CONTACTS VITA 67 BACKPLANE - C'SINK MTG. HOLES

SIZE	CAGE CODE	DRAWING NO	RESTRICTED TO
A1	00779	C-1996777	-

CUSTOMER DRAWING SCALE 8:1 SHEET 1 OF 1 REV F

4805 (3/11)

Pro/ENGINEER DRAWING