THIS DRAWING IS UNPUBLISHED. RELEASED FOR PUBLICATION – ,– .
© COPYRIGHT – By – ALL RIGHTS RESERVED.

LOC	DIST
H	—

REVISIONS

P	LTR	DESCRIPTION	DATE	DWN	APVD
	D	REVISED PER ECO–15–006790	06MAY2015	AP	RP

NOTES:

1. MATERIAL:
   –HOUSING: THERMOPL.POLYESTER
   COLOUR : GREY
   –CONTACTS: PHOSPHORBRONZE
2. PLATING CONTACT :
   0– –4: AT CONTACT AREA 0,8µm Au OVER 1,25µm NICKEL.
   AT ACTION PIN AREA 2,5µm Sn OVER 1,25µm NICKEL.

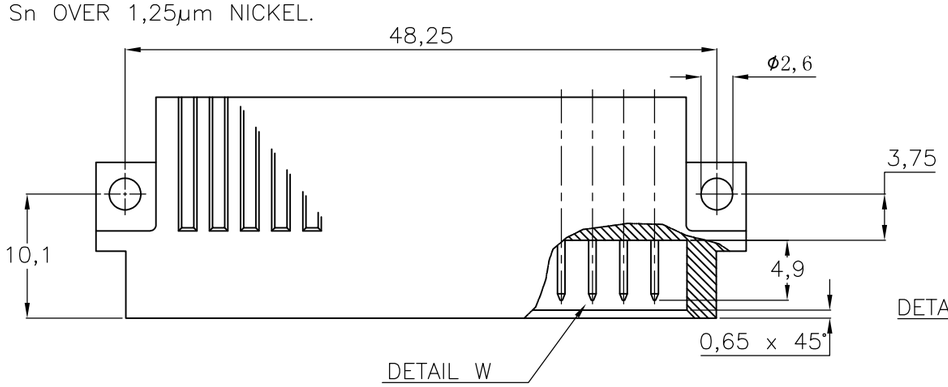

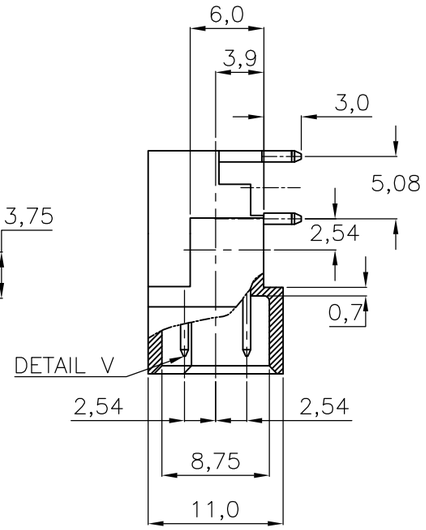

DETAIL W

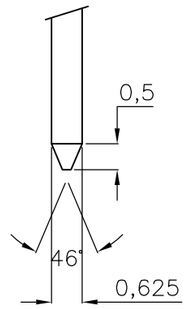

DETAIL V

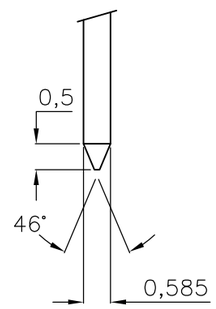

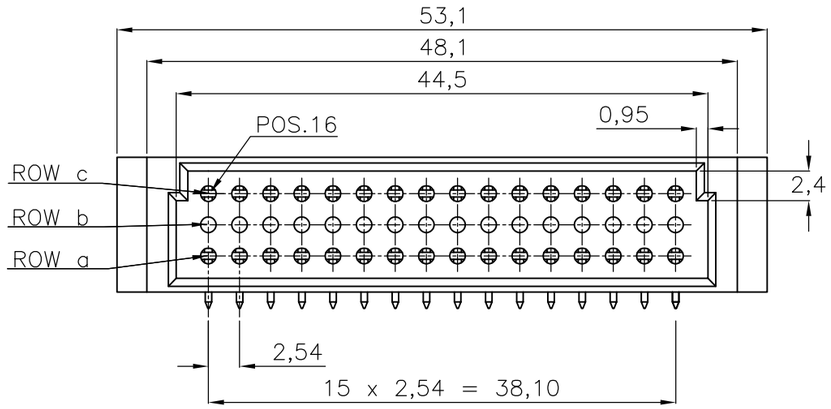

ROW																
a	X	X	X	X	X	X	X	X	X	X	X	X	X	X	X	X
b	O	O	O	O	O	O	O	O	O	O	O	O	O	O	O	O
c	X	X	X	X	X	X	X	X	X	X	X	X	X	X	X	X
POS	16	15	14	13	12	11	10	9	8	7	6	5	4	3	2	1

AN ASTERISK ,,X'' DENOTES A CONTACT.

P.C.B. HOLE DIM. ACTION PIN	
DRILLED HOLE	: 1,15 ± 0,025 mm
FIN. HOLE	: 0,94 to 1,09 mm
AFTER REFLOW	: 0,91 to 1,09 mm
Cu–thks	: 0,025 to 0,075 mm
SnPb–thks	: 0,004 to 0,010 mm

OBSOLETE	~~SEE NOTE 2~~	~~SEE NOTE 1~~	~~6–106276–8~~
	SEE NOTE 2	SEE NOTE 1	106276–4
	FINISH	MATERIAL	PARTNUMBER

REFERENCE FAMILY DRAWING 650473
FOR ALL TYPE C HEADER OFFERINGS

THIS DRAWING IS A CONTROLLED DOCUMENT.

DIMENSIONS: mm

TOLERANCES UNLESS OTHERWISE SPECIFIED:
0 PLC ± –
1 PLC ± –
2 PLC ± –
3 PLC ± –
4 PLC ± –
ANGLES ± –

MATERIAL –
FINISH –

DWN R.V.LOKVEN 24MAR93
CHK J.V.GRUNSVEN 24MAR93
APVD L.V.SOEST –
PRODUCT SPEC —
APPLICATION SPEC —
WEIGHT —

TE Connectivity

NAME
32 POS. DIN 41612 TYPE C/2 MALE
ACTION PIN CONNECTOR FOR 1,6
P.C.B. THICKNESS

SIZE	CAGE CODE	DRAWING NO	RESTRICTED TO
A3	00779	C–106276	—

CUSTOMER DRAWING | SCALE NTS | SHEET 1 OF 1 | REV D