THIS DRAWING IS UNPUBLISHED. RELEASED FOR PUBLICATION -,- .
© COPYRIGHT - By - ALL RIGHTS RESERVED.

REVISIONS

P	LTR	DESCRIPTION	DATE	DWN	APVD
	T	REVISED PER ECO-16-001548	24FEB2016	AP	DG

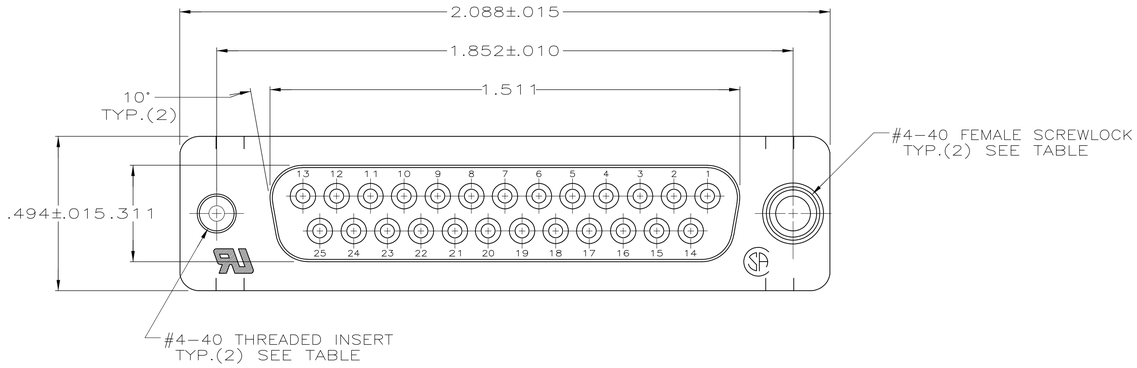

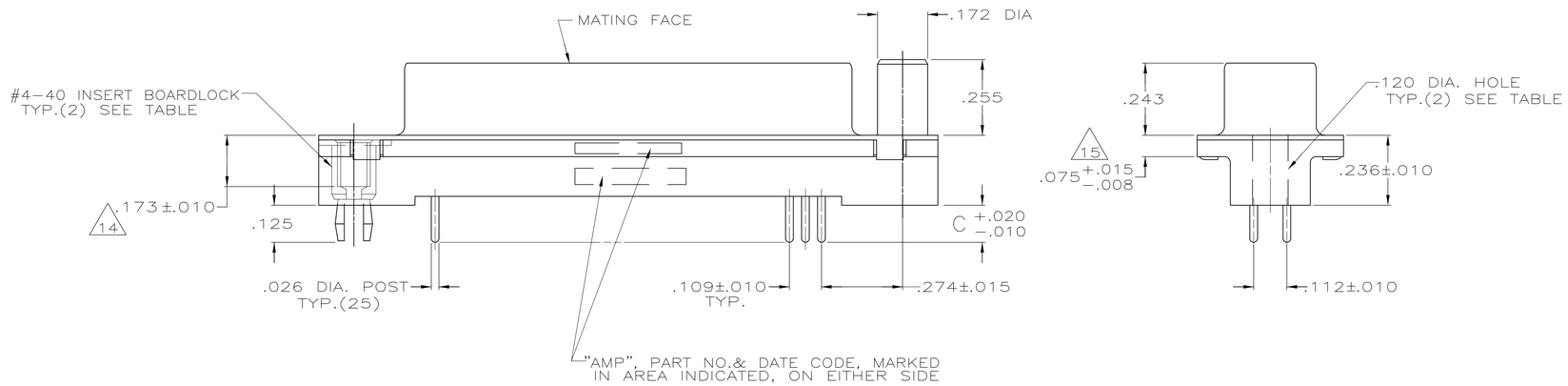

1. FLAME RETARDANT 94V-O RATED THERMOPLASTIC; COLOR: BLACK.
2. CARBON STEEL.
3. PHOS. BRONZE.
4. INSERTS & BOARDLOCKS: BRASS, SCREWLOCKS: ZINC.
5. NOTE DELETED.
6. .000200 MIN TIN OVER .000100 MIN COPPER.
7. INSERTS: UNPLATED, SCREWLOCKS: UNPLATED, BOARDLOCKS: TIN OVER COPPER.
8. GOLD FLASH FOR LENGTH OF .100 MIN FROM MATING END, .000100-.000200 BRIGHT TIN OR BRIGHT TIN LEAD ON TERMINATION END, ALL OVER .000050 NICKEL ON ENTIRE CONTACT.
9. .000030 GOLD FOR LENGTH OF .100 MIN FROM MATING END, .000100-.000200 BRIGHT TIN OR BRIGHT TIN LEAD ON TERMINATION END, ALL OVER .000050 NICKEL ON ENTIRE CONTACT.
10. .000010 GOLD FOR LENGTH OF .100 MIN FROM MATING END, .000100-.000200 BRIGHT TIN OR BRIGHT TIN LEAD ON TERMINATION END, ALL OVER .000050 NICKEL ON ENTIRE CONTACT.
11. NOTE DELETED.
12. CONTACTS SELECTIVELY LOADED IN POSITIONS 1 THRU 19 AND 21 THRU 25.
13. DATUMS AND BASIC DIMENSIONS ESTABLISHED BY CUSTOMER.
14. RECOMMENDED SCREWLOCK IS 5747877-3 WITH RETENTION INSERTS.
15. .110 MAX IN SHELL TAB CLINCH AREAS.

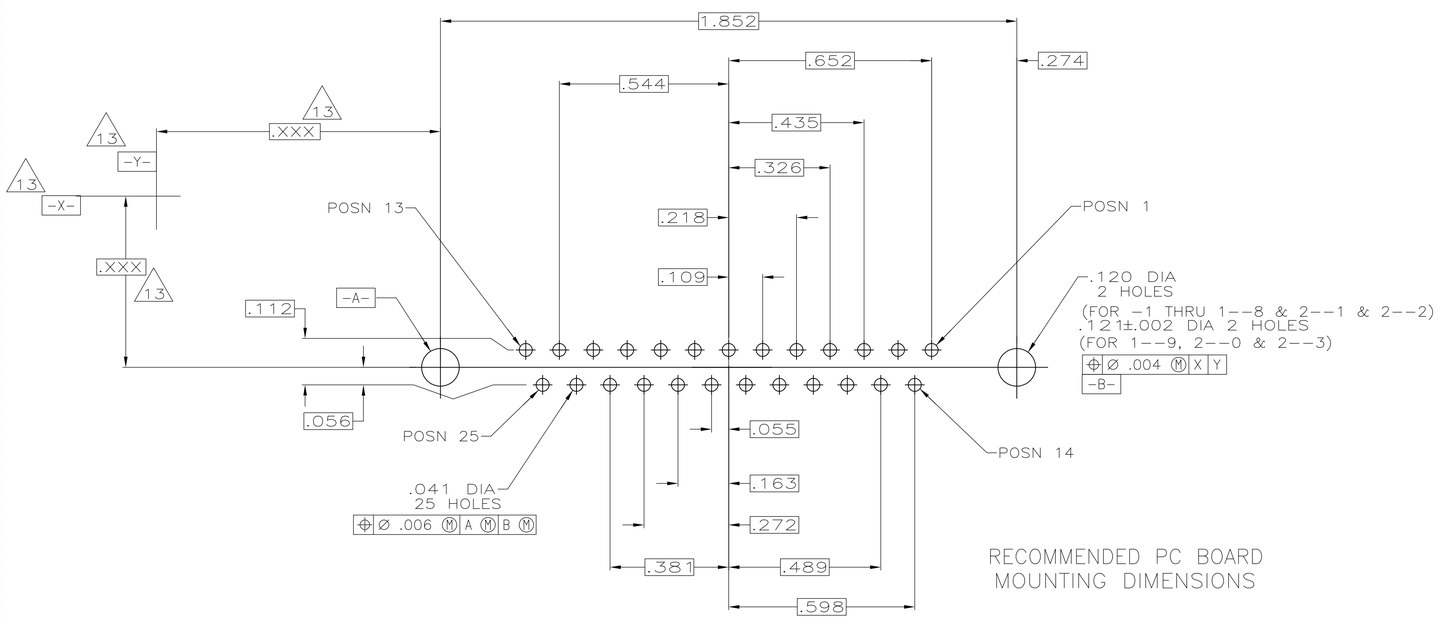

RECOMMENDED PC BOARD MOUNTING DIMENSIONS

12	SUPERSEDED BY 2-747708-0	W/INSERT BOARDLOCKS	9	.125	2-747708-3
	SUPERSEDED BY 1-745967-6	W/FEMALE SCREWLOCKS	9	.170	2-747708-2
	OBSOLETE	W/ THREADED INSERTS	10	.125	2-747708-1
		WITH	9	.125	2-747708-0
	OBSOLETE	INSERT BOARDLOCKS	8	.125	1-747708-9
	OBSOLETE		9	.250	1-747708-8
	OBSOLETE		8	.250	1-747708-7
	OBSOLETE	WITH	9	.170	1-747708-6
	OBSOLETE	FEMALE SCREWLOCKS	8	.170	1-747708-5
	SUPERSEDED BY 1-745967-4		9	.125	1-747708-4
	OBSOLETE		8	.125	1-747708-3
	OBSOLETE		9	.250	1-747708-2
	OBSOLETE		8	.250	1-747708-1
	OBSOLETE	WITH	9	.170	1-747708-0
	OBSOLETE	THREADED INSERTS	8	.170	747708-9
	SUPERSEDED BY 745967-8		9	.125	747708-8
	OBSOLETE		8	.125	747708-7
	OBSOLETE		9	.250	747708-6
	OBSOLETE		8	.250	747708-5
	OBSOLETE	WITH	9	.170	747708-4
	OBSOLETE	.120 DIA. HOLE	8	.170	747708-3
	SUPERSEDED BY 745967-2		9	.125	747708-2
	SUPERSEDED BY 745967-1		8	.125	747708-1

THIS DRAWING IS A CONTROLLED DOCUMENT.

DIMENSIONS: INCHES

TOLERANCES UNLESS OTHERWISE SPECIFIED:
0 PLC ± -
1 PLC ± -
2 PLC ± -
3 PLC ± .005
4 PLC ± -
ANGLES ± 2°

MATERIAL
HOUSING: 1
SHELL: 2 CONTACTS: 3
INSERTS, SCREWLOCKS AND BOARDLOCKS: 4

FINISH
SHELL: 5
CONTACTS: SEE TABLE
INSERTS, SCREWLOCKS & BOARDLOCKS: 6

DWN S. WELDON 2-27-85
CHK J. GERACE 2-27-85
APVD -
PRODUCT SPEC 108-40025
APPLICATION SPEC 114-40023
WEIGHT -

TE Connectivity

NAME
RECEPTACLE ASSEMBLY, SIZE 3, 25 POS., VERTICAL, .026 DIA. DUPLEX PLATED POSTS, FRONT SHELL, AMPLIMITE

SIZE	CAGE CODE	DRAWING NO	RESTRICTED TO
A1	00779	C-747708	-

CUSTOMER DRAWING | SCALE NTS | SHEET 1 OF 1 | REV T

4805 (1/15)