THIS DRAWING IS UNPUBLISHED. RELEASED FOR PUBLICATION -,- .
© COPYRIGHT - By - ALL RIGHTS RESERVED.

LOC	DIST
G	14

REVISIONS

P	LTR	DESCRIPTION	DATE	DWN	APVD
	H	REVISED PER ECO-14-015277	24FEB2015	NK	DR

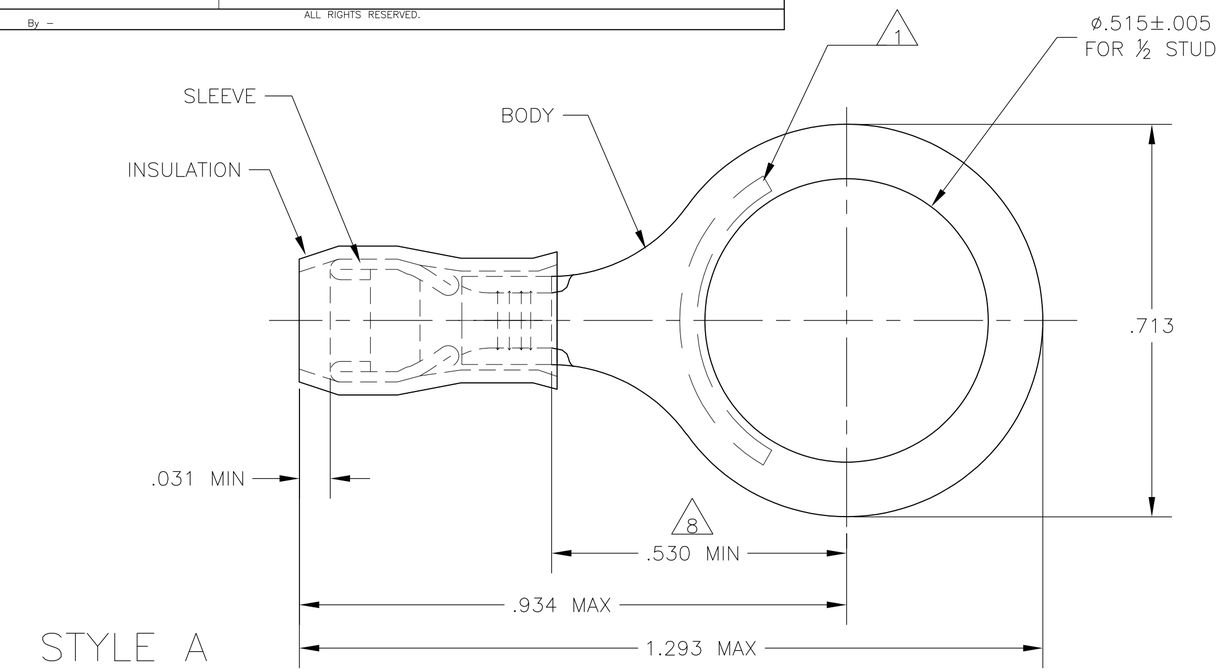

STYLE A

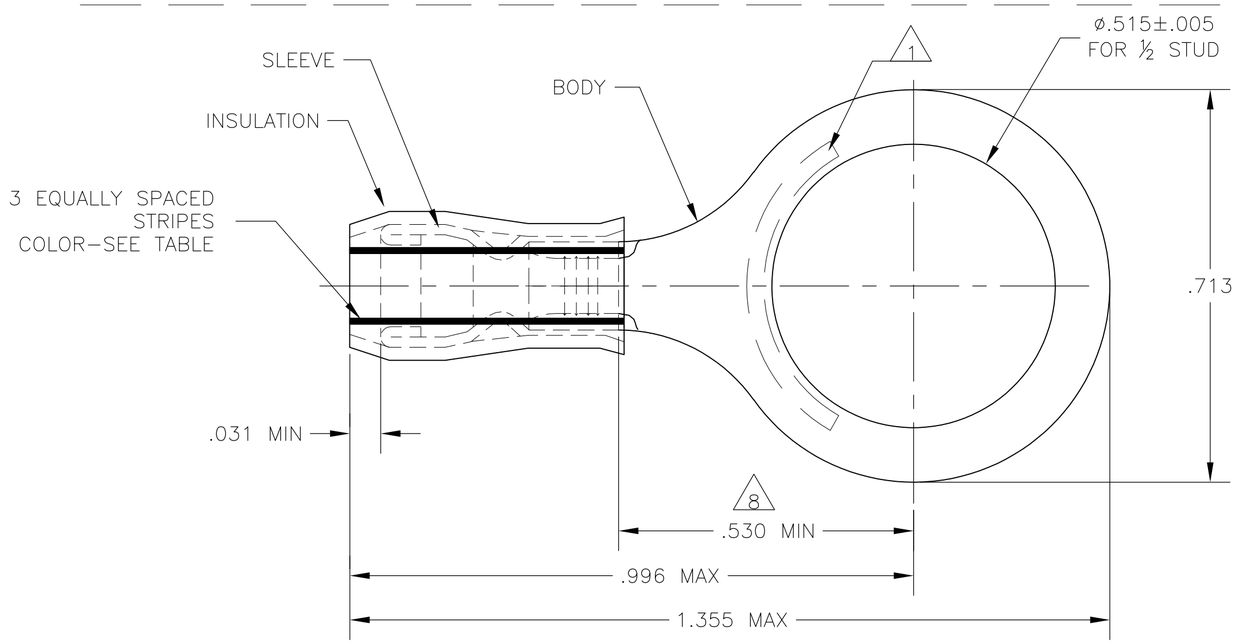

STYLE B
INSULATION RESTRICTING

AMP WIRE RANGE	E13288 Listed	LR7189 Certified
16-14 AWG SOLID OR STRANDED	16-14 AWG SOLID OR STRANDED	16-14 AWG SOLID OR STRANDED

1. STAMP "AMP - SEE TABLE" APPROX AS SHOWN.
2. WIRE INSULATION DIA: SEE TABLE.
3. TONGUE MATERIAL THK: .031±.002.
4. BODY: TIN PLATE .000100 MIN EXT THK PER ASTM B545.
5. SLEEVE: TIN PLATE .000100 MIN EXT THK PER ASTM B545.
6. BODY & SLEEVE- CU PER ASTM B152 INSULATION - NYLON PER ASTM D4066 COLOR - BLUE.
7. APPLIES FROM EDGE OF METAL WIRE BARREL TO CENTER OF STUD HOLE.
8. MEETS MS25036-155, CLASS 1 & 2.
9. MEETS M7928/1-46, CLASS 1 & 2.
10. MEETS M7928/1-55, CLASS 1 & 2.

QTY	PACKAGE TYPE	STAMPING	WIRE INSUL DIA	WIRE SIZE	STRIPE COLOR	STYLE	FINISH BODY	FINISH SLEEVE	PART NO
500	LOOSE PIECE	14	.078-.130	14	GREEN	B	4	5	10 2-328976-2
500	LOOSE PIECE	16	.063-.130	16	BLUE	B			9 2-328976-1
500	LOOSE PIECE	16-14	.105-.150	16-14	--	A			8 328976

CUSTOMER SERVICE SYSTEMS	
FOR ADDITIONAL PRODUCT INFORMATION OR COPIES OF DRAWINGS AND TECHNICAL DOCUMENTS	PRODUCT INFORMATION CENTER 1-800-522-6752
FOR APPLICATION TOOLING INFORMATION	TOOLING ASSISTANCE CENTER 1-800-722-1111
FOR ORDER ENTRY	1-800-526-5142

MAX RECOMMENDED OPERATING TEMPERATURE: 105°C MAX

VOLTAGE RATING: 300 VOLT MAX

CIRCULAR MIL AREA: 1.04-2.62mm² [2,050-5,180] STRANDED OR SOLID

THIS DRAWING IS A CONTROLLED DOCUMENT.

DIMENSIONS: INCHES

TOLERANCES UNLESS OTHERWISE SPECIFIED:
0 PLC ± -
1 PLC ± -
2 PLC ± -
3 PLC ± .008
4 PLC ± -
ANGLES ± -

MATERIAL 6

FINISH SEE TABLE

DWN JR RUTH	13JAN10	
CHK T MICHIELUTTI	13JAN10	
APVD T MICHIELUTTI	13JAN10	
PRODUCT SPEC —		
APPLICATION SPEC —		
WEIGHT —		

TE Connectivity

NAME TERMINAL, RING TONGUE, PIDG WIRE SIZE: 16-14 AWG

SIZE	CAGE CODE	DRAWING NO	RESTRICTED TO
A2	00779	C-328976	—

CUSTOMER DRAWING | SCALE 5:1 | SHEET 1 OF 1 | REV H

328976

1471-9 (3/11)