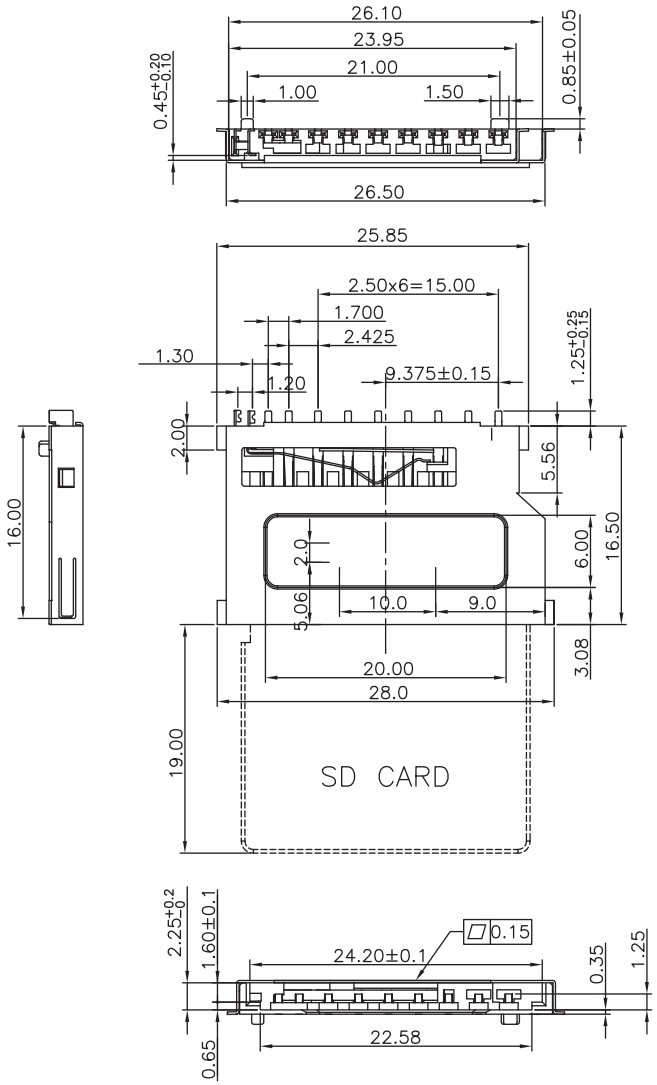

PIN No	NAME	DESCRIPTION
1	CD/DAT3	CARD DETECTION
2	CMD	COMMAND/ANSWER
3	Vss1	GND
4	Vdd	POWER SUPPLY
5	CLK	CLOCK
6	Vss2	GND
7	DAT0	Connector data line 0
8	DAT1	Connector data line 1
9	DAT2	Connector data line 2

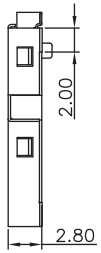

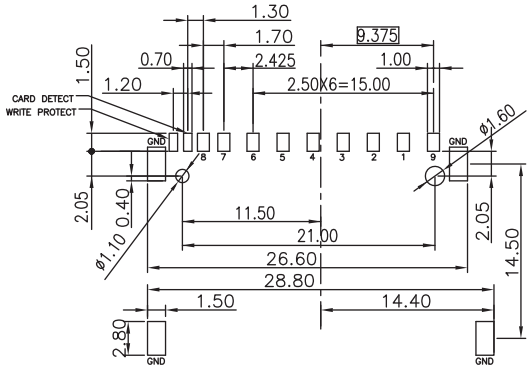

RECOMMENDED P.C.B LAYOUT
TOLERANCES: ±0.05mn

TECHNICAL CHARACTERISTICS

MATERIAL
INSULATOR: PA 9T
FLAMABILITY RATING: UL94-V0
COLOR: BLACK
CONTACT MATERIAL: COPPER ALLOY
CONTACT TYPE: STAMPED
CONTACT PLATING: SELECTIVE GOLD
SHIELDING: COPPER ALLOY
SHIELDING PLATING:NICKEL
QUALITY CLASS: 10000 MATING CYCLES

ENVIRONMENTAL
OPERATING TEMPERATURE: -25 UP TO 85°C
COMPLIANCE: LEAD FREE AND ROHS

ELECTRICAL
CURRENT RATING: 0.5 A
WORKING VOLTAGE: 100 VAC
INSULATOR RESISTANCE: >1000 MΩ
WITHSTANDING VOLTAGE: 500 VAC/MIN
CONTACT RESISTANCE: 100 mΩ MAX

SOLDERING
JEDEC LEAD FREE REFLOW SOLDERING PROCESS

PACKAGING
TAPE & REEL

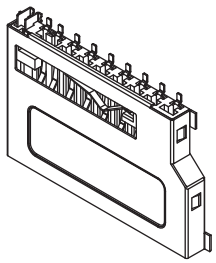

RoHS Compliant

REV	DATE	FILE	BY
F	10-SEP-13	DIM UPDATE	QL
E	27-MAR-12	PINNING	QL
D	07-MAR-12	PAGE 2 SWITCH	GG
C	22-FEB-12	PAGE 2	GG
B	16-FEB-12	TKP	GG
A	11-AUG-31	PDF	GG

PROJECTION:

APPROVAL: RJ

GENERAL TOLERANCE
.X = +/_ 0.2
.XX = +/_ 0.15

UNIT: MM
SCALE:
SHEET: 1/3
DRAW:

WÜRTH ELEKTRONIK

DESCRIPTION: SD Card Connector - Push & Pull - Short Type With Card Detection - 9 pins

WERI PART NO: 693 063 020 911

SIZE **A4**

Contact OFF

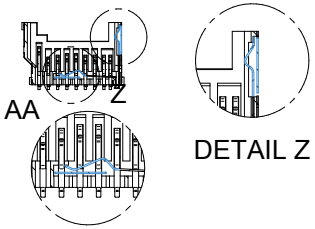

Contact ON / LOCK OFF

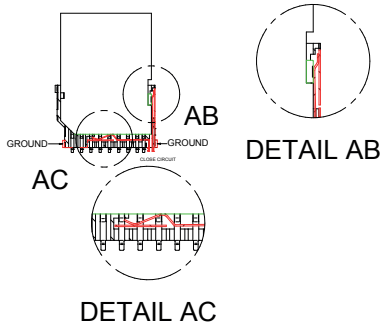

Contact ON / LOCK ON

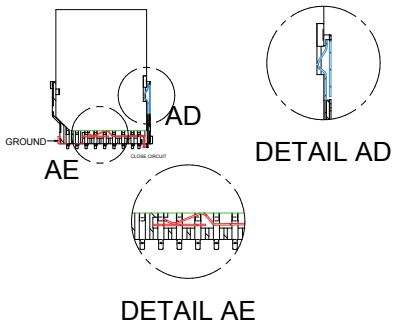

Card detection switch		Write protection switch		
Card removed	Card inserted	Card removed	Card inserted	
			Write Protect	Write enable
OPEN	CLOSE	OPEN	OPEN	CLOSE

RoHS Compliant

REV	DATE	FILE	BY

PROJECTION:

GENERAL TOLERANCE
.X = +/_ 0.2
.XX = +/_ 0.15

WÜRTH ELEKTRONIK

APPROVAL: RJ

UNIT: MM
SCALE:
SHEET: 2/3
DRAW:

DESCRIPTION: SD Card Connector - Push & Pull - Short Type With Card Detection - 9 pins

WERI PART NO: 693 063 020 911

SIZE **A4**

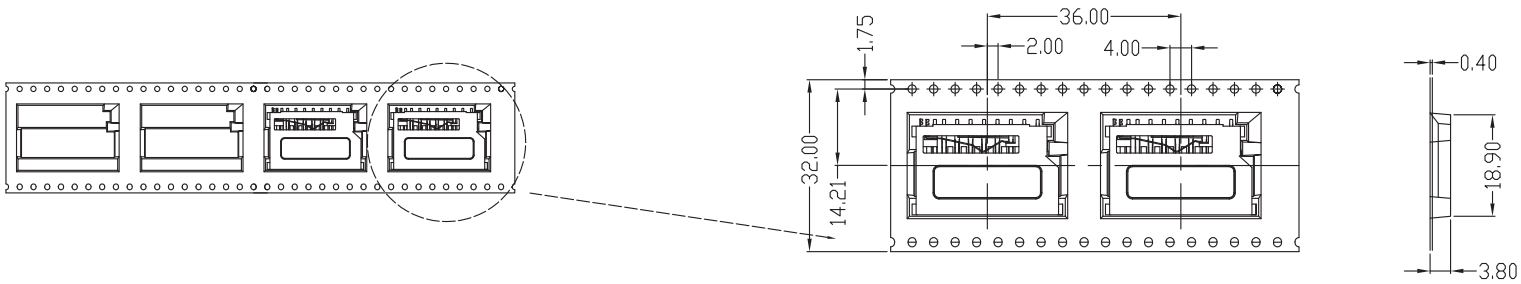

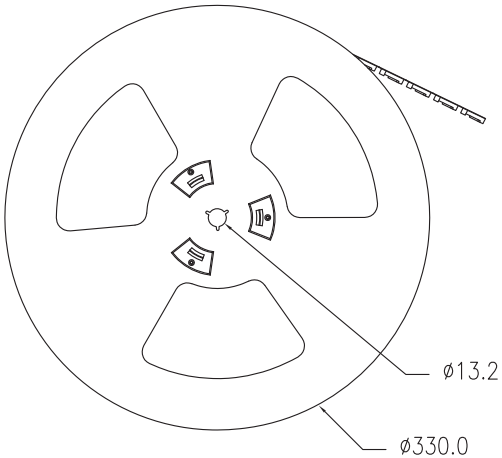

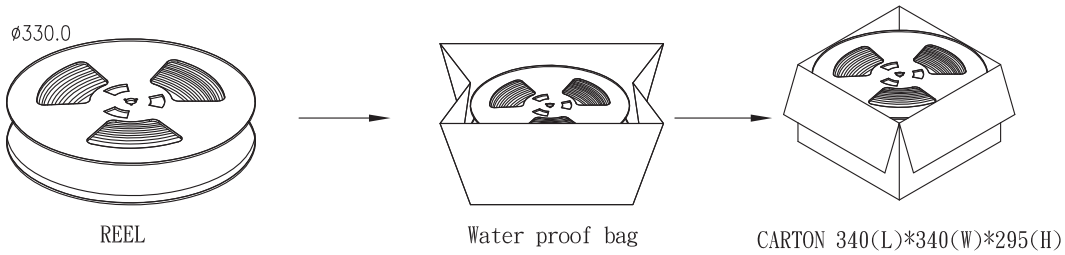

300 Pcs/Reel
6 Reels/Carton
1800 Pcs/Carton

RoHS Compliant

REV	DATE	FILE	BY
G			
F			
E			
D			
C			
B			
A	22-AUG-14	PDF	AS

PROJECTION:

APPROVAL: RJ

GENERAL TOLERANCE
.X = +/_ 0.2
.XX = +/_ 0.15

UNIT: MM
SCALE:
SHEET: 1/1
DRAW: AS

WÜRTH ELEKTRONIK

DESCRIPTION: SD Card Connector - Push & Pull - Short Type With Card Detection - 9 pins

WERI PART NO: 615 016 137 621

SIZE **A4**